République du Cameroun
Paix – Travail – Patrie

Ministère de la Décentralisation et de la Développement locale

Région du Nord-Ouest

Département de la Mezam

Commune de Bamenda III

Republic of Cameroon
Peace – Work - Fatherland

Ministry of Decentralization and Local Development

North West Region

Mezam Division

Bamenda III Council

BAMENDA III COUNCIL INTERNAL TENDERS BOARD

BY EMERGENCY PROCEDURE

REQUEST FOR QUOTATION DOCUMENT

N^{O} 001/RQ/BIIIC/BIIICITB/PNDP/2020 OF 29/07/2020

FOR THE EXTENSION OF 1,093 METER LENGTH OF PIPING NETWORK FROM NTAHKEKAH TO NKWASSI QUARTERS WITH THE CONSTRUCTION OF THREE STAND TAPS, BAMENDA III COUNCIL AREA, BAMENDA III SUBDIVISION, MEZAM DIVISION, NORTH WEST REGION

FINANCING: BIIIC/PNDP BUDGET 2020

Latest dates to submit the bids	***19/08/2020, at 10:00a.m***
Bids Opening dates	***19/08/2020, at 11:00a.m***

Table of Contents

QUOTATION LETTER....3
NOTICE BOARD MODEL....4
INVITATION LETTER....6
INSTRUCTION TO BIDDERS....8
EVALUATION GRID OF THE CONTRACTORS OFFERS....10
CONDITIONS FOR THE QUALIFICATION OF ENTERPRISES....14
MODEL FORMS USED TO CONSTITUTE A QUOTATION....17
TASK DESCRIPTION AND UNIT PRICE....19
DECLARATION OF QUALIFICATION....21
EXPERIENCE....28
MODEL JOBBING ORDER....30
ANNEXES....36
MODEL FOR PERSONNEL AND MATERIAL MEANS....39
II. EQUIPMENT....40
TECHNICAL FILE....41
SPECIAL TECHNICAL SPECIFICATIONS....43
VIII. SPECIFIC TECHNICAL CLAUSES (CCTP)....44
8.1. TECHNICAL SPECIFICATIONS OF WORKS....44
BILL OF QUANTITIES AND COST ESTIMATES....55
SCHEDULE OF UNIT PRICES....57
DETAIL PRICE BREAKDOWN....60
PLANS AND DRAWINGS....62
MODEL OF ENGAGEMENT OF THE TENDERER....68
MITIGATION OF RISKS CLAUSES ON THE ENVIRONMENT....70

QUOTATION LETTER

NAME OF BIDDER	
DATE	
PROJECT TITLE	**EXTENSION OF 1,093 METER LENGTH OF PIPING NETWORK FROM NTAHKEKAH TO NKWASSI QUARTERS WITH THE CONSTRUCTION OF THREE STAND TAPS, BAMENDA III COUNCIL AREA, BAMENDA III SUBDIVISION, MEZAM DIVISION, NORTH WEST REGION**
REFERENCE OF THE REQUEST FOR QUOTATION	**N^{O} 001/RQ/BIIIC/BIIICITB/PNDP/2020 OF 29/07/2020**

The Mayor of Bamenda III Council,

Subject: QUOTATION LETTER

Dear Sir,

After having examined the Request for Quotation file referenced above, we, the undersigned, propose to carry out the described work in conformity with all the conditions and specifications of the technical file (the general and particular technical specifications, the descriptive and quantitative bills) for a total, all taxes inclusive of:
Amount (in figures)..... (in words) .....
.....francs including all taxes and within the completion period in your Request for Quotation Letter.
The following documents form an integral part of our Bid:

1) The present Quotation Letter established according to the model, dated and signed;
2) The Descriptive and Quantitative Form duly filled, dated and signed;
3) The Schedule of Unit Prices;
4) The Declaration of Qualifications according to the model, dated and signed;
5) The Draft Contract initialled on each page;
6) Other essential documents

Through your participation in the present tendering procedure, we accept all the conditions of the selection procedure defined in the Request for Quotation file, and declare that our offer takes into account work access and execution conditions. We understand that you are not held to award a contract at the end of this procedure.

We engage ourselves on the terms of this period for a period of 150 Days as from the date fixed for the opening of bids, as stipulated in the Request for Quotation Letter. The offer will continue to engage us and could be accepted at any time before the end of this period.

THE GENERAL MANAGER

NOTICE BOARD MODEL

République du Cameroun
Paix – Travail – Patrie

Ministère de la Décentralisation et de la Développement locale

Région du Nord-Ouest

Département de la Mezam

Commune de Bamenda III

Republic of Cameroon
Peace – Work - Fatherland

Ministry of Decentralization and Local Development

North West Region

Mezam Division

Bamenda III Council

Bamenda, the……

COUNCIL PROJECT 'WORK'

PROJECT NAME	***EXTENSION OF 1,093 METER LENGTH OF PIPING NETWORK FROM NTAHKEKAH TO NKWASSI QUARTERS WITH THE CONSTRUCTION OF THREE STAND TAPS, BAMENDA III COUNCIL AREA, BAMENDA III SUBDIVISION, MEZAM DIVISION, NORTH WEST REGION***
VILLAGE AND QUARTER	***NKWEN , NTAHKEKAH TO NKWASSI QUARTERS***
PROJECT NUMBER	***001/BIIIC/STUDIES/DAB/KVA/2020***
DURATION	***03 MONTHS (90 DAYS)***

A request for quotation including the bidding conditions, a description of works and envisaged contracting conditions is placed by the MAYOR OF BAMENDA III COUNCIL at the disposal of all qualified firms and enterprises interested in the execution of the above mentioned works. The requests for quotation file can be obtained **FREE OF CHARGE** from the BAMENDA III Council Secretariat at Bamenda, MEZAM Division from **29/07/2020**, during the working days, between **7:30 AM** and **3:00 PM**.

The participation to this call for competition is opened to companies having submitted a file for pre-qualification and are recorded by the PNDP Regional Coordination Unit in the following fields of intervention: ***(I) hydraulics***.

The participation in this call to competition is also opened to all companies able to comply with the administrative qualifications conditions as well as technical and financial conditions as defined in the request for quotation.

Latest date to submit the bids	**19/08/2020, at 10:00a.m**
Bids Opening date	**19/08/2020, at 11:00a.m**

The Mayor, Bamenda III Council

2 9 JUIL 2020

NGU Cletus TANWE

INVITATION LETTER

République du Cameroun
Paix – Travail – Patrie

Ministère de la Décentralisation et de la Développement locale

Région du Nord-Ouest

Département de la Mezam

Commune de Bamenda III

Republic of Cameroon
Peace – Work - Fatherland

Ministry of Decentralization and Local Development

North West Region

Mezam Division

Bamenda III Council

Ref. No. ……. /MTAD/BDBIIIC/SG/M/2020 *Bamenda,*

the……

The Director of:-

SUBJECT: INVITATION TO QUOTE

PROJECT NAME	***EXTENSION OF 1,093 METER LENGTH OF PIPING NETWORK FROM NTAHKEKAH TO NKWASSI QUARTERS WITH THE CONSTRUCTION OF THREE STAND TAPS, BAMENDA III COUNCIL AREA, BAMENDA III SUBDIVISION, MEZAM DIVISION, NORTH WEST REGION***
VILLAGE AND QUARTER	***NKWEN , NTAHKEKAH TO NKWASSI QUARTERS***
PROJECT NUMBER	***001/BIIIC/STUDIES/DAB/KVA/2020***
DURATION	***03 MONTHS (90 DAYS)***

Madam/Sir,
Within the framework of the National Community Driven Development Program (PNDP), the Bamenda III Council has obtained an allocation from PNDP and considers using part of it ***FOR THE EXTENSION OF 1,093 METER LENGTH OF PIPING NETWORK FROM NTAHKEKAH TO NKWASSI QUARTERS WITH THE CONSTRUCTION OF THREE STAND TAPS, BAMENDA III COUNCIL AREA, BAMENDA III SUBDIVISION, MEZAM DIVISION, NORTH WEST REGION***
You are hereby invited to submit your best offer for the execution of the aforesaid works.

A request for quotation file including the bidding conditions, a description of work as well as a sample contract to be used is placed at your disposal by the council. The quotation file can be withdrawn **FREE OF CHARGE** from the **29/07/2020**, during the working days, between 7:30 AM and 3:00 PM and the deadline of reception of the offers is fixed on **19/08/2020, at 10:00.AM.**
While counting on your usual participation, accept our sincere greetings.

The Mayor, Bamenda III Council

2 9 JUIL 2020

REPUBLIC OF CAMEROON REPUBLIQUE DU CAMEROUN THE MAYOR BAMENDA III COUNCIL BAMENDA III SUBDIVISIONAL COUNCIL ARRONDISSEMENT DE BAMENDA III

NGU Cletus TANWE

INSTRUCTION TO BIDDERS

1. Contents of the Request for Quotation
This request for quotation describes the work subject to the contract, establishes the bid submission conditions, the attribution rules and stipulates the conditions of contract applicable to the bid. Through its participation, the Bidder acknowledges having reviewed and accepted the instructions, conditions and specifications contained in the request for quotation.

2. Bidding Language
The bid, and all the documents constituting it, must be compiled in French or English language.

3. Elements of an admissible tender
To be admissible, the offer must be established with one (01) original and FIVE (05) copies, and include the following elements:
1) The Quotation letter established according to the following model: IV, A), dated and signed;
2) The quantitative and estimated form completed (model IV, B), dated and signed;
3) The statement of Qualifications (following the model IV, C), applicable to non-already registered providers;
4) Draft contract, initialled on each page (following the model IV, D);
5) Other key documents (attestation of the site visit and site visit report).

4. Bid Currency
The biding prices will be given in CFA Francs.

5. The bid validity Period
The offer will remain valid for a period of 90 (ninety) calendar days.

6. The conditions of filing of offers

6.1. The bidder shall place the original and five (5) copies of its offer in a sealed envelope and addressed it to the Mayor using the address indicated in the Request for Quotation.

6.2. The sealed envelope will bear the title of the project with the mention "***To be open only in the presence of the Council Tenders Board***".

7. Date and time limit for filing of tenders

Bids must be received at the address shown on the request for quotation, on or before the date and time set in the request for quotation. Any offer presented after the set time will not be open and will be returned to the bidder.

8 Opening of tenders

8.1. Bids will be open during a Council tender board session in the presence of representatives of bidders wishing to attend on the date and time at the address specified in the request for quotation letter.

8.2. The names of bidders and amounts of the offers will be read aloud and will be recorded by the Secretary of the Council tender's board, in minutes of opening of the bids.

9. Evaluation of tenders

The Council tender board members will evaluate the offers and may if necessary appoint an expert in the field to accompany them in the analysis. The evaluation of tenders will be conducted in the following order:
a. Verification of the conformity of administrative documents to avoid any failures at the time of attribution;

b. Verify that the Letter of Quotation is well filled, dated and signed with the name and function of the signatory;
c. Verify that the Descriptive and Quantitative Forms are duly filled, dated and signed;
d. Verification of the arithmetic operations, if necessary multiplying unit prices by the quantities and by using the price in words to carry out necessary corrections;
e. To work out a quotation summary table based on the corrected amount and ranked in ascending order;
f. Checking in the offer classified file, of Declaration of Qualifications according to the imposed model;
g. Verify the qualification of the bidder by comparing his declaration with the minimum requirement of qualification given in Chapter III of the present request for quotation.

If the lowest Bidder's bids ranked in the summary table are checked to satisfy the minimal conditions imposed for qualifications, the Council Tender's Board will propose him as provisional contractor to the Mayor of Bamenda Council, Contracting Authority.

If the lowest Bidder's bid does not satisfy the imposed minimal conditions of qualification, the offer will be eliminated and the Council Tender Board will carry out the examination of the offer of the second bidder in the ranking summary table. This procedure can be repeated in the event of incomplete offers or unqualified bidders.

The Council Tender Board will draw up a detailed final evaluation report with a recommendation to the Mayor (contracting Authority) for the provisional attribution of the Bid.

EVALUATION GRID OF THE CONTRACTORS OFFERS

APPRAISAL GRILL FOR HYDRAULIC WORKS				
N°	*CRITERIA*	*CONFORMITY*		*OBSERVATIONS*
		YES	*NO*	
REFERENCES OF THE COMPANY				
1	*At least two (02) registered contracts and PV's of reception in similar works (1st and last pages) certified by a competent authority*			
2	*At least one (01) registered contract and PV of reception in similar works (1st and last pages) certified by a competent authority*			
PERMANENT OR MOBILIZABLE MATERIAL MEANS				
3	*Proof of ownership or hiring of a vibrator in good operating condition*			
4	*Proof of ownership or hiring of a concrete mixer*			
5	*Proof of ownership or hiring of a Pick up 4 x 4*			
6	*Proof of ownership of carpentry tool kids)*			
7	*Proof of ownership of masonry tool kids*			
QUALIFICATION OF SITE PERSONNEL				
8	*Organizational Chart of the company*			
9	*Organizational Chart of site with comments*			
10	*Works Director (Rural Engineering Technician with at least 03 years of experience in similar works)*			
11	*Certified copy of certificate of the Works Director*			
13	*CV signed and dated by the works Director*			
14	*Attestation of availability of the works Director*			
15	*Site foreman (a Civil or Rural Engineering Technician with at least 03 years of experience in similar works)*			

16	*Certified copy of certificate of Foreman*			
17	*CV signed and dated by the site foreman*			
19	*Attestation of availability of the Foreman*			
	METHODOLOGY OF INTERVENTION AND EXECUTION OF THE WORKS			
20	*Attestation of site Visit signed by the bidder upon honour*			
21	*Site Visit report with attached pictures*			
22	*Detailed technical note concerning the methodology and organisation of works*			
23	*Planning of execution of works*			
24	*Respect of the duration of work*			
25	*Description of safety measures at the site*			
26	*Description of socio - environmental measures for the protection the site*			
27	*Coherence in the execution of works*			
28	*Coherence in the organisation of the site*			
29	*CCTP dully initialled on each page and signed and dated on the last page*			
	CAPACITY OF SELF-FINANCING			
30	*Attestation of credibility Minimum 75% of the bid price in F CFA*			
	GENERAL PRESENTATION OF THE BIDS			
31	*Presence of all the documents*			
32	*Properly bind*			
33	*Table of content*			
34	*Page separators in colour apart from white*			
35	*Order prescribed respected*			
36	*Clearness of the documents*			

N/B: Only bidders who score at least 70% YES on the above given evaluation grid shall be considered to be technically qualified and can be recommended to the Contracting Authority for the award of the contract.

10. The Bid Attribution

10.1. The Contracting Authority (Mayor of Bamenda III Council) will invite the provisional contracting Bidder selected to present his administrative documents within 15 days. The administrative file shall include:

a. the taxpayer card;
b. Attestation of Business registration
c. Attestation to prove that bidder is current with taxes;
d. the certificate of imposition;
e. A certificate from ARMP of non exclusion from public contracts;
f. A certificate of non bankruptcy from the Court of the locality were the company is based;
g. A Certificate attesting that the bidder is in order with his social security contributions signed by Regional chief of centres CNPS or a representative ;
h. These certificates shall be dated less than three months;
i. Bank account attestation
j. Capacity to pre-finance
k. Caution
l. An attestation and plan of localization of the bidder.
m. In addition, the mayor will invite the provisional contractor to present the technical documents (ex: personnel means, equipment and material...) for good execution of the project (see point V).

10.2. Provided with these certificates, the Mayor, (Contracting Authority), will prepare the final minutes of attribution indicating that he has received a satisfactory administrative file that confirms the recommendation for attribution which was made to him by the Council Tender Board.

10.3. If the bidder declared provisional winner cannot constitute a satisfactory administrative file, **within 15 days,** the MAYOR, Contracting Authority, will establish an official report confirming the failure of the Bidder to present his administrative document and will forward it to the Chairman of the Council Tender Board which will have to meet again and submit an amended evaluation report, justifying rejection of the offer initially selected, and establishing a new recommendation in conformity with the evaluation.

10.4. If the, Contracting Authority, does not accept the recommendation of attribution of the Council Tender Board, he will prepare minutes justifying his refusal on objective basis and forward it to the Chairperson of the Council Tender Board which will have to meet again. In case of disagreement on the conclusions of the evaluation and the selection of the bidder, the ARMP will have to rule.

10.5 Before the contractor selected is invited to sign his contract, the result of the analysis of the offers and the proposal for an attribution of the **Contracting Authority** will be forwarded in writing to PNDP for NON OBJECTION for a duration not exceeding 7 days.

10.6. Within 90 DAYS following the date of reception of the offer, the contractor selected will be invited to sign a contract according to the model and the conditions presented in the present request for quotation file.

11. Corruption and fraudulent practices

The Mayor, his representatives, the Members of the Council Tender Board and the bidders, must observe in any circumstances professional strict rules of ethics. They must in particular avoid any corruption or any other form of fraudulent practice. On the bases of this principle, the expressions above are defined as follows;

a) "corrupt practice" is the offering, giving, receiving, or soliciting, directly or indirectly, of anything of value to influence improperly the actions of another party; 1

b) "fraudulent practice" is any act or omission, including misrepresentation, that knowingly or recklessly misleads, or attempts to mislead, a party to obtain financial or other benefit or to avoid an obligation; 2

c) "collusive practices" is an arrangement between two or more parties designed to achieve an improper purpose, including to influence improperly the actions of another party 3;

d) "coercive practices" is impairing or harming, or threatening to impair or harm, directly or indirectly, any party or the property of the party to influence improperly the actions of a party 4;

e) "obstructive practice"

---

[1] For the purpose of this sub-paragraph, "*another party*" refers to a public official acting in relation to the selection process or contract execution. In this context "public official" includes World Bank staff and employees of other organizations taking or reviewing selection decisions.

[2] For the purpose of this sub-paragraph, "*party*" refers to a public official; the terms "*benefit*" and "*obligation*" relate to the selection process or contract execution; and the "act or omission" is intended to influence the selection process or contract execution.

[3] For the purpose of this sub-paragraph, "*parties*" refers to participants in the procurement or selection process (including public officials) attempting either themselves, or through another person or entity not participating in the procurement or selection process, to simulate competition or to establish contract prices at artificial, non-competitive levels, or are privy to each other's bid prices or other conditions.

[4] For the purpose of this sub-paragraph, "*party*" refers to a participant in the selection process or contract execution.

f) " (aa) " deliberately destroying, falsifying, altering, or concealing of evidence material to the investigation or making false statements to investigators in order to materially impede a Bank investigation into allegations of a corrupt, fraudulent, coercive, or collusive practice; and/or threatening, harassing, or intimidating any party to prevent it from disclosing its knowledge of matters relevant to the investigation or from pursuing the investigation, or

g) "(bb)" acts intended to materially impede the exercise of the Bank's inspection and audit rights provided for under paragraph Bamenda.

CONDITIONS FOR THE QUALIFICATION OF ENTERPRISES

CAUTION

Bidders registered for their qualifications following the PNDP advertisement for the prequalification of companies, are exempted to submit a declaration of administrative, technical, and financial qualification.

The Bidders not yet registered in PNDP registries are authorized to tender, but they must then include in their bid, a declaration of qualification established according to the models hereafter, applicable to the administrative, technical and financial conditions. These declarations will be checked for their exactitude. In the event of misrepresentation, the bidders bid will be rejected and notification will be addressed to ARMP for the possible application of sanctions.

The works subject to the request for quotation are part of the following fields of intervention:

HYDRAULICS WORKS

The table below lists the documents and information to be submitted and explain how this information will be used to assess the administrative admissibility and the satisfaction of the technical and financial qualifications.

INFORMATION TO BE SUBMITTED		Form To use	CONDITIONS TO SATISFY
Administrative Information			**Administrative Conditions to be satisfied**
1	**Presentation of the firm** Status of the company, date of incorporation Physical Location **Postal** address Names, titles, telephone Number, email Name and title of the person authorized to sign a quotation Tax identification number Banking Information	**C.1 form.** **C.2 form.** **C.3 form.**	To have filled correctly and completely the information requested in the form Not to have had a terminated contract or to have given up a building site within the framework of the PNDP during the last 3 years
2	**Declarations to be joined** Plan of localization Commercial register License Certificate of nontax royalty Certificate of NCPs Declaration on the honour of no bankruptcy Declaration on the honour of no exclusion by ARMP Banking certificate **For electrification contracts with AES SONEL or the water connection with CAMWATER:** -Certificate of approval of AES SONEL or CAMWATER		To have joined the required documents, including their declarations on the honour according to the models presented
Declarations of a Technical Nature			**Technical Qualification Conditions**
3	**Declaration of the firm experience**	**C.4 form.** (Table)	To have carry out at least 2 similar experiences within the last 10 years To have joined copies of the Certificates of Provisional Reception (and/or final) of the completed similar projects
4	**Qualifications of the management personnel of project**	**C.5 form.** (CV)	To have at least one of the following qualifications: - HND + 2years of experience -BACC + 2years of experience - management experiences in the capacity as project manager of more than 5 projects of the same field
financial statements			**Financial Qualification Conditions**
5	**Declaration of contract amounts of the projects listed in the declaration of experiment (# 3 above)**	**C.4 form.** (provided with the contract amounts of the listed projects)	The total T of the C.4 Form. divided by the number of delivered listed projects, during the financial year (between 2 and 5) is ≥ 10 Million F CFA

MODEL FORMS USED TO CONSTITUTE A QUOTATION

NAME OF BIDDER	
DATE	
NAME TITLE:	
REFERENCE OF THE REQUEST FOR QUOTATION	

29 JUIL 2020

the,.....

The Mayor, Bamenda III Council

Subject: *QUOTATION LETTER*

FONGU Cletus TANWE

Dear Sir,

After having examined the Request for Quotations File referenced above, we, the undersigned, propose to carry out described work, in conformity with all the conditions and specifications of the technical file (the general and particular technical specifications, the descriptive and quantitative bills) for a total all taxes Inclusive of _____

_____

_____

Francs CFA including all taxes and within the completion period imposed in your Request for Quotation Letter.

The following documents form integral part of our Bid:

1) The present Letter of Quotation established according to the model, dated and signed;
2) The Descriptive and Quantitative Form duly filled, dated and signed;
3) The schedule of unit price;
4) The declaration of qualifications according to the model;
5) The draft contract initialled on each page;
6) Other essential documents.

Through your participation to the present tendering procedure, we accept all the conditions of the selection procedure, define in the request for quotation file, and declare that our offer takes into account work access and execution conditions. We understand that you are not held to award a contract at the end of this procedure.

We engage ourselves on the terms of this offer for a period of 90 days as from the date fixed for the bid opening, as stipulated in the Request for Quotations Letter. The offer will continue to engage us and could be accepted at any time before the end of this period.

THE GENERAL MANAGER

TASK DESCRIPTION AND UNIT PRICE

Outline of works to be executed:

The works to be realized in the course of execution of this project shall consist:

- Site installation
- Mass excavation of the platform to receive structures
- Construction of the structures;
- excavation of pipeline;
- backfilling of pipe line;
- testing operation
- Plumbing installations;
- Painting works;
- Environmental mitigation measures.

Equipment of the micro project to be supplied.

This micro project will not have any supply of equipment.

- Planting of 20 shading trees.

Detailed description of works to be realized

Constructive Elements	*Constructive Solution*	*Materials*
Structures	Stand taps, low points, high points, and bench marks	Sand, cement, gravel and rods.
Pipe line	Pipe 32'', pipe 63'', galvanize pipe	Plastics and galvanize pipes

DECLARATION OF QUALIFICATION

1	***STATUS OF THE COMPANY***	
2	***DATE OF INCORPORATION***	
3	***TAXATION IDENTIFICATION No***	
4	***PHYSICAL ADDRESS***	*Street number:* *Town, Region*
5	***POSTAL ADDRESS***	*P.O box* *Town, Region*
6	***MANAGEMENT STAFF***	*Name, Telephone (S), Addresses electronic*
	GENERAL MANAGER	
	TECHNICAL DIRECTOR	
	ADMINISTRATIVE DIRECTOR	
7	***NAME, POSITION, OF THE PERSON AUTHORIZED TO SIGN A BID WITH BAMENDA 3 COUNCIL***	
8	***BANKING INFORMATION***	*Name* *Address* *Account No.*

FORM C. 1. *PRESENTATION OF THE FIRM*

9	*SITUATION PLAN Visa by competent Authorities*	
10	*CERTIFICATE OF INCORPORATION*	
11	*BUSINESS LICENCE*	
12	*TAXPAYER's CARD*	
13	*TAX CLARANCE CERTIFICATE*	
14	*CNPS ATTESTATION*	
15	*DECLARATION ON the HONOR OF NO BANKRUPTCY* *ATTESTATION OF SOLVENCY*	
16	*DECLARATION ON the HONOR OF NOT EXCLUSION/SUSPENSION BY ARMP*	
17	*ATTESTATION OF SITES VISIT AND REPORT*	
18	*ATTESTATION OF BANK ACCOUNT*	
19	*FOR ELECTRIFICATION AND REHABILITATION OR EXTENSION OF CAMWATER WATER SUPPLY NETWORK CONNECTION TO AES SONEL JOIN A CERTIFICATE Of RECOGNITION FROM THESE CORPORATIONS.*	

FORM C. 2. ATTESTATION OF SOLVENCY

....., the.....

NAME OF THE BIDDER	
POSTAL ADDRESS	
ADDRESS PHYSICAL	

Dear Sirs,

We hereby declare on honour that at the date of the signature of this document, our company is not in situation of bankruptcy and we commit ourselves if we would be retained as provisional contractor for the implementation of this project, to submit within seven (7) days as you requested, a certificate duly sign by the competent authority and confirming this declaration.

THE GENERAL MANAGER

FORM C. 3. DECLARATION OF NON EXCLUSION/ SUSPENSION BY ARMP

....., the.....

NAME OF THE BIDDER	
POSTAL ADDRESS	
ADDRESS PHYSICAL	

Dear Sirs,

We hereby declare on honour that at the date of the signature of this document, our company is not in situation of exclusion, nor of suspension, by the Authorities of the Cameroun Public Contract Regulatory Board (ARMP).

We commit ourselves if we are retained as provisional contractor for the implementation of this project, submit within seven (7) days as you requested, a certificate duly sign by the competent authorities of ARMP confirming this declaration.

THE GENERAL MANAGER

FORM C. 4. REPORT OF SITE VISIT

....., the.....

NAME OF THE BIDDER	
POSTAL ADDRESS	
ADDRESS PHYSICAL	

I the undersigned _____Director/Engineer in charge of_____ for _____company attest to have visited the project site_____ following the invitation to tender No. _____

As a result of this site visit, the following observations were made:

(a) GENERAL OBSERVATIONS

(1)
(2)
(3)
(4)
(5)

(b) SPECIFIC OBSERVATIONS

(1)
(2)
(3)
(4)
(5)

THE GENERAL MANAGER

N/B: Attached are pictures of the site.

FORM C. 5. EXPERIENCE OF THE FIRM

List contracts of the same domain of intervention, carried out during the last five years. Listed work must be provisionally received.

If the experience of the company covers several fields of intervention among the 5 fields covered by the PNDP, the declaration of the qualifications requires a distinct table of each of the domains of intervention. These fields are as follows:

1. MEZAMLDINGS	*All sectors: education, health, markets, slaughter-houses, warehouses, buildings administrative,*
2. INSTALLATIONS PUBLIC EQUIPMENT	*Sporting complexes, parks, road stations, refuse tips*
3. EARTHWORKS & CIVIL ENGINEERING	*Rural roads, roadway systems, bridges, pedestrian, irrigated drainage, drainage system, thresholds, perimeters, stabilization of slope/banks.*
4. PUBLIC ELECTRIFICATION	*Equipment, sub-stations, transport, poses cables*
5. HYDRAULIC WORK	*Well, Bore holes, water catchment systems, water capturing*

AREA OF INTERVENTION:						
	Name of the project	*Client's name*	*Client contact Tel. No.*	*Amount of contract*	*Date signing contract*	*Date provisional reception*
1						
2						
3						
4						
5						
etc						
TOTAL				*T =*		

N.B.: Ensure that the copies of the certificates of provisional acceptance (and/or final) of each project listed above is attached.

FORM C. 6. CURRICULUM VITAE OF THE HEAD TECHNICAL MANAGER DESIGNATED FOR THE MANAGEMENT OF THE PROJECT

NAME		
FIRST NAME		
ADDRESS		
TELEPHONE NO.		

EDUCATION DIPLOMA		
NAME OF SCHOOL		

FIRST LANGUAGE		

Experience

From Month / year **To** Month / year	Name, address from the employer Function occupied Project	

From Month / year **To** Month / year	Name, address from the employer Function occupied Project	

From Month / year **To** Month / year	Name, address from the employer Function occupied Project	

From Month / year **To** Month / year	Name, address from the employer Function occupied Project	

From Month / year **To** Month / year	Name, address from the employer Function occupied Project	

From Month / year **To** Month / year	Name, address from the employer Function occupied Project	

N.B.: Be sure to attach copies of diplomas, work certificates or contracts

FORM C. 7. ATTESTATION OF SITE VISIT

....., the.....

NAME OF THE BIDDER	
POSTAL ADDRESS	
ADDRESS PHYSICAL	

I the undersigned _____General Manager of_____ company do hereby attest and sign on honour, to have visited the project site for_____ following the invitation to tender No. _____ .

This attestation is therefore issued to serve when and wherever necessary.

THE GENERAL MANAGER

MODEL JOBBING ORDER

JOBBING ORDER NO 001/RQ/BIIIC/BIIICITB/PNDP/2020

Awarded after Request for Quotation

NO 001/RQ/BIIIC/BIIICITB/PNDP/2020 OF 29/07/2020 FOR THE EXTENSION OF 1,093 METER LENGTH OF PIPING NETWORK FROM NTAHKEKAH TO NKWASSI QUARTERS WITH THE CONSTRUCTION OF THREE STAND TAPS, BAMENDA III COUNCIL AREA, BAMENDA III SUBDIVISION, MEZAM DIVISION, NORTH WEST REGION

CONTRACTOR: **ETS.....**

BP: .....

Tel.....

TAX PAYER'S N° .....

BANK ACCOUNT N° .....

.....

SUBJECT: ***FOR THE EXTENSION OF 1,093 METER LENGTH OF PIPING NETWORK FROM NTAHKEKAH TO NKWASSI QUARTERS WITH THE CONSTRUCTION OF THREE STAND TAPS, BAMENDA III COUNCIL AREA, BAMENDA III SUBDIVISION, MEZAM DIVISION, NORTH WEST REGION*** ***AMOUNTS:***

TOTAL AMOUNT WITHOUT TAXES (MHT)	
*VAT (19,25%) * MHT*	
*IR * MHT)*	
TOTAL AMOUNT WITH TAXES INCLUDED (MHT + TVA)	
NET AMOUNT TO BE PAID	

CONTRACT DURATION: **(03) Months**

FUNDING: **(PNDP) / BAMENDA III COUNCIL**

SUBMITTED ON THE:.....

SIGN ON THE:.....

NOTIFIED ON THE:.....

REGISTERED ON THE:.....

CHAPTER I: GENERALITIES

- **Article 1** : ***Objective of the JOBBING ORDER (JO)***

The present JOBBING Order (JO) is ***FOR THE EXTENSION OF 1,093 METER LENGTH OF PIPING NETWORK FROM NTAHKEKAH TO NKWASSI QUARTERS WITH THE CONSTRUCTION OF THREE STAND TAPS, BAMENDA III COUNCIL AREA, BAMENDA III SUBDIVISION, MEZAM DIVISION, NORTH WEST REGION.*** The description of these works is indicated in article 10 hereafter.

- **Article 2** ***Implementation procedure of the Jobbing Order (JO)***

The present Jobbing Oder (JO) is published according to the procedure laid down in the Request for Quotations.

- **Article 3** : ***Documents constituting the Jobbing Oder (JO)***

The contractual documents constituting this Jobbing Oder (JO) are by order of priorities as follow:

(1) The present Jobbing Oder (JO);

(2) The quantitative and descriptive form;

(3) The supplier bid and his financial proposals in all the non-contrary technical and administrative specifications imposed in the request of quotation.

- **Article 4** : ***Generalities***

The present Jobbing Oder (JO) is subjected to the regulation in force as regards public contracts in Cameroun at the date of its signature

- **Article 5** : ***Attributions of the Chief of Service and the Contract Engineer***

To apply the provisions of this Jobbing Oder (JO), it is specified that ***The Client is the Mayor of Bamenda III Council***, while attributions of the Contract Engineer are exerted by the sector Head appointed for the contract.

- **Article 6** : ***Time and place of execution***

The execution deadline is set as follow ***three (03) months*** counting from the date of notification of the Service Order to start works.

The works will be done at the following location: ***NTAHKEKAH-NKWASSI Nkwen Village, BAMENDA III Sub Division***

- **Article 7** : ***Residence of the Contractor***

The Contractor is based in ....., ***PO. Box:*.....**, ***Tel:*** .....

CHAPTER II: EXECUTION OF THE JOBBING ODER (JO)

- **Article 8** : ***Role and responsibility of the Contractor***

The contractor's role is to ensure the execution of the works as described in article 10 under the control of the Contract Engineer and this in accordance with the rules and Norms in force in Cameroun and the specifications of present Jobbing Oder (JO).

- **Article 9** : ***Consistency of the services***

The services of the contractor include the construction and equipping of the block of 02 classrooms and all the expenses related to technical reception and insurance.

- **Article 10**: ***Description of the works***

The services include ***FOR THE EXTENSION OF 1,093 METER LENGTH OF PIPING NETWORK FROM NTAHKEKAH TO NKWASSI QUARTERS WITH THE CONSTRUCTION OF THREE STAND TAPS, BAMENDA III COUNCIL AREA, BAMENDA III SUBDIVISION, MEZAM DIVISION, NORTH WEST REGION***

- **Article 11**: ***Information and documents required by the contractor.***
- **Article 12**: ***Reception of the works***

The Mayor will determine the date and the methods of the reception of the works, which will be carried out in the presence of the Contractor by a reception commission.

The reception commission will be composed of the following members:

CHAIRPERSON: ***The Mayor of Bamenda III Council or his representative;***
SECRETARY: ***The Contract Engineer, DDMINEE FOR MEZAM;***
MEMBERS:
- ***The CDO Bamenda III Council***
- ***The CONTROLLER;***
- ***The PNDP Infrastructure Engineer ;***
- ***The PNDP Regional Co-ordinator or his Representative ;***
- ***The DD MINDDEVEL***

The quorum of the reception Commission is achieved by the presence of *2/3* of its members.

The contractor is convened at the reception as observer. He is required to attend or to be represented. His absence is equivalent to the total acceptance of the conclusions of the reception commission.

The reception Commission will check the conformity of the works with the prescriptions contained in the Jobbing Oder (JO).

In the event of nonconformity of the works, the contractor will be invited to replace at his expenses the rejected works.

In the event of works in conformity, the commission will pronounce the reception. A minute of reception signed by all the Members of the Commission and the contractor will be prepared. This reception commission shall report on the quantity and quality of the works, and the respect of the contractual clauses.

Article 13: ***Guarantee***

The usual commercial guarantees mentioned in the general clauses and resulting from a defect or an early deterioration of the material are the responsibility of the contractor.

Article 14: ***Insurance***

Risks of all natures during transport until the place of delivery must be covered by an insurance taken by the contractor. The Mayor is free of any obligations or responsibility until reception of the works.

The insurance must represent a hundred and ten per cent (110%) of CAF value of the works "*store to store*" on a "*all risks*" basis, including strike and war risks, in a freely convertible currency. The Mayor must be designated as beneficiaries.

CHAPTER III: FINANCIAL PROVISIONS

Article 15: ***General information price***

The Contractor is reputed to have a perfect knowledge of all possible suggestions imposed for the execution of the services and of all the local conditions likely to influence this execution.

The prices of this Jobbing Oder (JO) are firm and non-revisable. They obligatorily cover all the works, expenses, incidental expense and risks and are All Taxes Inclusive.

Article 16: ***Assembling letter orders***

The total amount of this JOBBING Order (JO) amount to the sum of ..... is in accordance with the quantities and cost estimates attached in appendix.

Article 17: ***Modalities of payment***

(1) **Starting payment Advance**

After notification of the contract to the Contractor, an instalment corresponding to 20% of the amount of the Jobbing Oder (JO), All Taxes Inclusive can be paid upon request to the holder of the contract.

This instalment is guaranteed hundred per cent (100%) by a class A bank approved by the Ministry in charge of Finances.

The guarantee is delivered upon reception of the works subject of the Jobbing Oder (JO).

(2) **Payments in instalments**

The payments are done proportionately to the works and deductions are made from the previous payments. The Contractor is paid on submission of his bills and after reception of the works.

- **Article 18**: ***Banking domiciliation***

The Mayor will pay out the cost of the execution of present Jobbing Oder (JO) by bank transfer at the account *N°*.....*located at the* .....

- **Article 19**: ***Tax system***

The present LPO is subjected to all the rights and taxes in force in the Republic of Cameroun.

- **Article 20**: ***Stamp and registration***

Seven (07) originals copies of present Jobbing Oder (JO) are to be stamped and registered by the Contractor and at his expenses, in accordance with the regulation in force.

CHAPTER IV: OTHERS PROVISIONS

- **Article 21**: ***Edition and diffusion of Jobbing Oder (JO)***

Seven (07) copies of the present Jobbing Oder (JO) are published and diffused.

- **Article 22**: ***Litigations***

Any litigation occurring between the contracting parts will be the subject of an amicable direct negotiation.

Any disagreement related to the present Contract, which the parties cannot regulate through amicable agreement shall be subject to arbitration in accordance with the laws of Cameroon.

- **Article 23**: ***Cancellation of Jobbing Oder (JO)***

The Present Jobbing Oder (JO) can be cancelled under the conditions and forms envisaged by the regulation in force.

- **Article 24**: ***Validity of the Jobbing Order (JO)***

The Present Jobbing Oder (JO) will be valid only after its signature by the Mayor and will come to effect only to its notification to the contractor.

Awarded after Request for Quotation

NO 001/RQ/BIIIC/BIIICITB/PNDP/2020 OF 29/07/2020 FOR EXTENSION OF 1,093 METER LENGTH OF PIPING NETWORK FROM NTAHKEKAH TO NKWASSI QUARTERS WITH THE CONSTRUCTION OF THREE STAND TAPS, BAMENDA III COUNCIL AREA, BAMENDA III SUBDIVISION, MEZAM DIVISION, NORTH WEST REGION

CONTRACTOR:

ETS.....

BP: .....

Tel.....

TAX PAYER'S N° .....

BANK ACCOUNT N° .....

.....

SUBJECT: ***EXTENSION OF 1,093 METER LENGTH OF PIPING NETWORK FROM NTAHKEKAH TO NKWASSI QUARTERS WITH THE CONSTRUCTION OF THREE STAND TAPS, BAMENDA III COUNCIL AREA, BAMENDA III SUBDIVISION, MEZAM DIVISION, NORTH WEST REGION***

.

AMOUNTS:

TOTAL AMOUNT WITHOUT TAXES (MHT)	
*VAT (19.25%) * MHT*	
IR (2.2% OR 5.5%) MHT)*	
TOTAL AMOUNT WITH TAXES INCLUDED (MHT + TVA)	
NET AMOUNT TO BE PAID	

Done in seven (07) original copies at Bamenda III Council, the_____

Approved by

The Contractor

The Vote Holder/ Contracting Authority (The Mayor)

The Regional Coordinator PNDP NWR

REPUBLIC OF CAMEROON
REPUBLIQUE DU CAMEROUN
BAMENDA III SUBDIVISION
COMMUNE D'ARRONDISSEMENT DE BAMENDA III
THE MAYOR

FONGU Cletus TANWE

ANNEXES

ANNEXE 1: ENGAGEMENT OF THE TENDERER

I the undersigned, ..., acting by virtue of powers conferred on me, on behalf of the company, ***ETS*** .....with Headquarters situated at ..... Town,

After having taken knowledge of all the parts of the

JOBBING ORDER NO 001/RQ/BIIIC/BIIICITB/PNDP/2020

Awarded after Request for Quotation

NO 001/RQ/BIIIC/BIIICITB/PNDP/2020 OF 29/07/2020 FOR THE EXTENSION OF 1,093 METER LENGTH OF PIPING NETWORK FROM NTAHKEKAH TO NKWASSI QUARTERS WITH THE CONSTRUCTION OF THREE STAND TAPS, BAMENDA III COUNCIL AREA, BAMENDA III SUBDIVISION, MEZAM DIVISION, NORTH WEST REGION

Subject to me and commits me to carry out the aforementioned Contract in accordance with the conditions of the Particular Payment of the Invitation to tender, the Book of the Particular Technical specifications and the Book of the Particular Administrative Clauses, in particular the quantitative and qualitative confirmation of work, the respect of the deadlines, the guarantees and the insurance.

I commit myself moreover to ensure the recording and paying the forwarding costs of the contractual parts.

I declare taking to have taken perfect knowledge of the decree n° 33/CAB/PM of February 13 2007 putting the general Administrative clauses applicable to the Contracts of public works and supplies.

I confirm my agreement on the terms of the Special Administrative Clauses (Draft contract) and join the initialled copy of the aforesaid document to my offer.

I declare moreover that I remain committed by the present tender during a ninety (90) days deadline as from the date of opening of the folds.

Done at _____, the _____

Read and approved

The CONTRACTOR

ANNEX 2: SUBMISSION LETTER

I the undersigned, ..., acting by virtue of powers conferred on me, on behalf of the company,..... with Headquarters situated at ..... Town,

After having taken knowledge of all the parts of the Request for Quotation

JOBBING ORDER NO 001/RQ/BIIIC/BIIICITB/PNDP/2020

Awarded after Request for Quotation

NO 001/RQ/BIIIC/BIIICITB/PNDP/2020 OF 29/07/2020 FOR THE EXTENSION OF 1,093 METER LENGTH OF PIPING NETWORK FROM NTAHKEKAH TO NKWASSI QUARTERS WITH THE CONSTRUCTION OF THREE STAND TAPS, BAMENDA III COUNCIL AREA, BAMENDA III SUBDIVISION, MEZAM DIVISION, NORTH WEST REGION

In the case where our offer would be accepted, I subject myself and I engage to carry out the aforementioned contract in accordance with the conditions of the Particular Payment of the Invitation to tender, the Book of the Particular Administrative Clauses and the Book of the Particular Technical specifications, at the prices indicated in the Schedule Price Unit, Quantitative and Cost Estimate, for the total amounts of the Offer into Francs CFA of:

- ✓ In Letter and figure (All Taxes Inclusive): ..... ***CFA Francs (Eight*** ..... ***CFA Francs);***
- ✓ In Letter and figure (AIR 5,5/1.1 %): .....***CFA Francs (***..... ***CFA Francs);***
- ✓ In Letter and figure (Net to be paid): ..... ***CFA Francs (***..... ***CFA Francs);***
- ✓ To pay the forwarding costs of the contractual parts.

To begin work within seven (07) maximum days and to carry out the contract within three (03) months after the notification of Service Order to Start Work. The building Owner will release himself from the sums which had by him under this contract while making give credit to the open account ***N°*** ..... ***located at the*** .....

I declare taking to have taken perfect knowledge of the decree n° 33/CAB/PM of February 13 2007 putting the general Administrative clauses applicable to the Contracts of public works and supplies.

I confirm my agreement on the terms of the Book of the Particular Administrative Clauses (Draft contract) and join the initialled copy of the aforesaid document to my offer.

I declare moreover that I remained committed by the present tender during a ninety (90) days deadline as from the date of opening of the folds.

Done at _____, the _____

Read and approved

MODEL FOR PERSONNEL AND MATERIAL MEANS

I. STAFF [1]

	NAMES	*QUALIFICATION (diploma - training) (experience)*	*FUNCTION ON THE SITE*
A. Administrative staff on the site			
B. Support staff			

	NUMBER
V. Masons	
D. specialized technician	

II. Equipment

II - 1 equipment and material for the execution of the work

DESIGNATION	*NUMBER*	*AGE - STATE*	*ORIGIN*	*STATUS* [2]

II - 2 small material and construction tools

DESIGNATION	*NUMBER*	*AGE - STATE*	*ORIGIN*

To ……,

The Contracting Authority

The bidder
(Name, first name, signature and stamp)

TECHNICAL FILE

The technical file is jointly presented and constitutes part of the request for quotation.

The technical file includes:

- The specifications of the General technical clauses or GTCC technology terms (applicable to all the work of the same domain)
- The specifications of the specific Technical Clauses or CCTP (specific to the micro-project subject to the application of rating)
- The estimated schedule of the amounts constituting the decomposition of global and lump-sum of the contract prices
- The schedule of unit prices
- Plans

SPECIAL TECHNICAL SPECIFICATIONS

VIII. SPECIFIC TECHNICAL CLAUSES (CCTP)
8.1. Technical specifications of works
SUMMARY
INTRODUCTION
CHAPTER 1: GENERAL INFORMATION
Article 1: Volume of work to be executed.
Article 2: General Instructions
CHAPTER II: WORKS TO BE DONE BY THE CONTRACTOR
Article 3: Role of the Contractor
Article 4: Work plan
Article 5: Guarantee of works
CHAPTER III: ORIGIN AND QUALITY OF GEOMATERIALS AND CEMENT
Article 6: Quality and Quantity of Geo-materials
Article 7: Origin and quality of sand
Article 8: Origin and quality of gravel
Article 9: Origin and quality of stones
Article 10: Origin and quality of cement
CHAPTER IV: CONCRETE WORKS
Article 11: Preparation of concrete
CHAPTER V: METHOD OF EXECUTION
Article 12: General Information
12.1: Security at the work site
12.2: Traffic
Article 13: Stone Masonry
Article 14: Pointing and plastering
14.1 Pointing
14.2 Plastering
Article 15: Plumbing works
15.1 Pipe Specifications
15.1.1 Control tests on pipes
15.2 Fitting specifications
Article 16: Piping
16.1 Description
16.2 Care/Laying of pipes
16.3 Methods of determining quality of G.I and PVC piping laid.
CHAPTER VI: CONSTRUCTION METHODS
Article 17: Setting out of Works
Article 18: Excavation of Trenches
Article 19: Backfill
Article 20: Maintenance of Excavations
CHAPTER VII: WORK EVALUATION METHOD
Article 21: Calculation of the Level of Realization.
Article 22: Provisional Reception
Article 23: Conditions for the Final Reception

INTRODUCTION

The technical specifications presented herein below define the works that shall be executed during ***THE EXTENSION OF 1,093 METER LENGTH OF PIPING NETWORK FROM NTAHKEKAH TO NKWASSI QUARTERS WITH THE CONSTRUCTION OF THREE STAND TAPS, BAMENDA III COUNCIL AREA, BAMENDA III SUBDIVISION, MEZAM DIVISION, NORTH WEST REGION*** and the manner in which these works shall be carried out. So the Contractor is expected to read these specifications critically and identify all the articles that are applicable to his job.

CHAPTER I: GENERAL INFORMATION

Article 1: ***Volume*** **of Work to be executed.**

In each case, the volume of work to be executed is indicated in the bill of quantities, network maps and/or plans that are provided. The various works to be executed shall conform to the relevant terms of the technical specifications given herein below.

Article 2: ***General instructions***

It should be understood that the provision of the bill of quantities does not absolve the potential Contractor of the necessity to affect a well-planned site visit, at his own expense, to gain complete knowledge of the conditions prevailing on the terrain. This knowledge shall come in handy when preparing the List of Tasks and the Unit Price Schedule. Potential Contractors (or Bidders) shall provide a detailed and sequenced List of Tasks to be effected on each component of the project. Within fifteen (15) days from the date of notification to start work, the Contractor shall provide the Contract Engineer with:

-A detailed plan of the work, showing the scheduling of the various works to be executed in time

-Detailed technical drawing of the works to be realized

-A manpower deployment plan

-A schedule of the delivery of materials to the project site, showing possible delays

-Failure to forward the foregoing documents shall engender the postponement of the reception of project materials, which could result in a punishable overall delay in the execution of the project.

No material shall be used that has not been checked for conformity with the technical specifications by the Control Engineer.

The Contract Engineer reserves the right to modify the plans and Work schedule provided by the Contractor, which modification shall first be submitted to the Contracting Authority for approval. Under exceptional circumstances, the Contract Engineer may suggest modifications to the technical specifications for any component of a project to the Contracting Authority, while making sure that the overall cost of the project stays within the limits of the financial bid of the Contractor.

Any modification must be done in writing, with sufficient justification. For this purpose, a numbered page book (the project log book) shall be kept on site in which the Contract Engineer shall write his approved instructions. Both the Contractor, or his representative, and the Contract Engineer shall initial every page of the project logbook

It is therefore obligatory for the contractor to execute the works in conformity with:

-The Bills of Quantities and Estimates,

-The Special Administrative Clauses

-The Special Technical Clauses stated herein,

-Any other special rules and regulations that may be applicable to this job,

-The work schedule,

-The detailed technical drawings,

Subject to any approved modifications indicated in the project log book by the Control Engineer.

The Contractor shall take note of any omission or discrepancies that may exist in the three documents mentioned in the preceding paragraph, which omission or discrepancies could fundamentally affect the technical or aesthetic quality of the works executed to his detriment, and call the attention of the Supervisory Engineers who shall remain at his disposal of the Contractor for necessary information and inquiries through the duration of the project.

In this regard, the Contractor shall not absolve himself of the responsibility for poor quality work by citing imprecision, omissions or discrepancies in the technical specifications or modifications thereof indicated in the project log book by the Control Engineer.

Any works effected without regard for the foregoing instructions or provisions shall be demolished at the expense of the Contractor

CHAPTER II - WORKS TO BE DONE BY THE CONTRACTOR

Article 3: Role of the Contractor

The Contractor who shall be chosen after this call for tender, shall be responsible to execute all the works outlined here. These include all the phases from construction works low point, high point and control valve chambers and standpipe), pipeline excavation and backfilling as well as project sustainability.

Article 4 : Work plan

The Contractor shall execute the work within a deadline of three (03) months as from the date of notification of the service order to start work.

Article 5 : Guarantee of works

The Contractor shall take an engagement for the extension of the Potable Water Supply Scheme with the materials proposed and to respect all the technical norms in force.

In case of an accident leading to the abandonment of any of the working site, the Contractor is not compeled to another site. The Contractor shall not be entitled to any remuneration for the abandoned structure site.

The obligations of the Contractor during the guarantee period consist of changing, or repairing the worn out parts or those that have been damaged due to an error by the manufacturer.

CHAPTER II: ORIGIN AND QUALITY OF GEOMATERIALS AND CEMENT

Article 6: The Conformity Visit.

A conformity visit of all the equipments and materials shall be done at the beginning of the work execution inorder to verify:

- their conformity with those proposed in the Contractor's bid,
- the relationship between the capacities of these equipments and materials, the prescriptions in the Technical Specifications Journal and the execution deadline.

The pronouncement of this visit shall be expressed in a Report which shall not in any way set free the Contractor from his engagements.

Article 7: Quality and quantity of Geomaterials

The Contractor shall supply all the sand, stones and gravel that may be required for the execution of any component of the project. He shall also be responsible for the excavation and backfilling of the pipeline under the supervision of the Controller and Contract Engineer. In that regard, it is obligatory for the potential Contractor (or bidder) to visit the project site, at his own expense, before preparing his bids, in order to verify whether available geo-materials are of good quality and of sufficient quantity. He shall make any reservations concerning geo-materials in his bid.

Article 8: Origin and quality of sand

The nature and origin of sand remain subject to the approval of the Contract Engineer. Sand shall be obtained only from the rivers. The sand shall be of high quality. It shall be crunchy, stable, clean and shall be free of dust particles, schistose, gypseous or clayey debris and organic matter. It shall contain neither sulphur compounds no substances that can react with cement or metallic reinforcements. The sand component shall be more than 80% and the very fine constituents, with a dimension not exceeding eighty (80) microns that can be eliminated by settling, should be less than four percent (4%). No grain of sand should have a dimension greater than four (4) millimeters. If deemed necessary by the Control Engineer, the sand shall be sieved and washed thoroughly before use.

Moreover, filter grade sand shall have a grain size ranging from 0.8mm to 1.2mm inclusive. Furthermore, it shall be fried in order to eliminate algae zygospores, bacteria and/or bacteria spores, fungi and/or fungal hyphae.

Article 9: Origin and quality of gravel.

Gravel shall be crushed from black stones obtained from quarries chosen by the contractor and approved by the Contract Engineer. It shall be clean, without an excess of flat elongated pieces, dust or impurities. Constituents that can be eliminated through settling should be less than 2%. Its grading should be suited to its use. If deemed necessary by the Contract Engineer, it shall be washed before use.

Article 10: Origin and quality of Stone.

Stones shall be obtained from black stone quarries chosen by the Contractor and approved by the Contract Engineer. No stone shall have a dimension less than twenty (20) centimeters. These black stones known commonly as Basalts stones are highly recommended nothing more out of this.

Article 11: Origin and quality of Cement.

The cement to be used shall of the type PORTLAND artificiel CPA 325. It should be obtained in bags of 50kg. Any bag with hardened fragments shall be rejected. The recuperation of cement dust that has fallen on the ground shall be prohibited

CHAPTER III: CONCRETE WORKS

Article 12: Preparation of concrete.

Concrete works shall be of three (3) kinds:

i) Mass concrete for foundations works; it shall be a mixture of 250kg of cement per m^3 of sand and of appropriate thickness.

ii) Re-enforced concrete for standpipe, slab covers for valve chambers and standpipe valve chamber and chamber on soakaway pits; it shall be a mixture of 350kg of cement per m^3 of sand and shall be of appropriate thickness.

CHAPTER IV: METHOD OF EXECUTION

Article 13: General Information.

13.1 Security at Worksite.

The Contractor shall place at the entrance to work site signboards in bold letters indicating that work is underway and prohibiting the public and unauthorized persons from entering the work site. He shall be responsible for any accident that may occur on the work site or may be suffered by a third party, his staff and employees or officials of the Administration as a result of their presence on the work site. Organization of work and security on the work site shall therefore be the sole responsibility of the Contractor. Furthermore,

the Contractor shall be bound by the labour legislation in Cameroon vis-à-vis his workers and the Administration. Moreover, his insurance policy shall cover any damages he could cause to any one during the execution of the job.

13.2. Organization at Worksite.

The success of this project largely depends on the perfect coordination of the different activities by the Contractor (the Supply and the installation of the piping, the stand taps respecting the appropriate hydraulic technics, the appropriate gradient profil design, the construction of the superstructures with good drainage systems, project sustainability). This coordination requires the strict respect of the execution plan of the Water Supply Scheme which contains the outlined execution plans of the different activities.

The Enterprise shall place its Technical Director who shall be responsible to the Administration and on the worksite, the work execution shall be supervised by a Foreman who is well qualified and experienced in the domain of Potable Water Supply Scheme by the Gravity Method, and project sustainibility. The execution plan should be concieved in such a way that the different phases will be done without any break.

The state of work progression shall be established monthly and if after two months, the progression rate is considered low, the Contractor will be asked to deploy additional means to the worksite so as to accelerate work progression and meet up with the deadline.

During the work execution, the Administration has the right to modify the work.

13.3. Working Time

The general conditions fixed for workers by the Cameroon Legislation also applies to the Contractor's workers in the worksite. There shall be no work at night.

Article 14 : Traffic

The Contractor shall be responsible for ensuring that traffic is not obstructed on the entire stretch of his work site throughout the duration of the work, right up till provisional reception. No obstruction of traffic shall be allowed for more than two hours. Maintenance of traffic flow shall be the responsibility of the Contractor. In case of any breach of contract in this matter, the Contract Engineer may bring in a third party to correct any shortcomings that may be impeding the traffic flow, and related expenses shall be borne by the Contractor.

Where interference of the traffic flow for a given period is inevitable, the Contract Engineer shall be informed of the situation at least 7 days in advance, so that he can seek the opinion of local Administrative authorities and get everything arranged beforehand.

In case a deviation has to be used, the contractor shall submit to the Contract Engineer for approval after consultation with local administrative authorities, the deviation route and his plan for maintaining the deviation throughout the duration of the works that have necessitated the deviation.

Article 15: Stone Masonry

Stone masonry shall be aesthetical and in accordance with structure type and civil engineering rules.

Binding mortar shall be a mixture of 400kg of cement per m^3 of sand, no grain of which shall have a dimension exceeding 4mm.

Mortar containing a mixture of 450kg of cement per m^3 of sand shall be used for the finishing of the external joints of non-visible walls of stone masonry

Article 16: Pointing and Plastering

16.1 Pointing

The joints of all internal and external walls of stone masonry that are visible shall be carefully pointed to give them an aesthetic look. Mortar containing 600kg of cement per m³ of sand shall be used for pointing with a cement paste (1:0) finish

16.2 Plastering

Plastering of surfaces in contact with water shall comprise pointing of the mortar joints followed by a 1cm thick layer of spatter dash 1:2 (m625). This shall then be followed by the application of a rendering coat of 2cm thick 1:4 (m300) mixtures and a setting coat 2cm thick 1:2 (m625). The walls shall then be finished with cement paste. Plastering of surfaces not in contact with water, such as chambers for control valves and shall consist of 1 coat of plaster 1cm thick and a mixture of 1:3 (m400)

Article 17: Plumbing Works

By plumbing works include:

i) Laying of pipes in the trenches
ii) Construction and installation of chambers for control valves
iii) Installation of branch lines right up to the last plastic pipe before the standpipes.

17.1 Resistance to corrosion

All the materials to be used ought to be resistant to water and air corrosion (in this case, the Contractor is asked to present documents to ascertain that control tests were carried out in the factory on the supplied materiels or their equivalents to be supplied). The Contractor shall attach to his bid the list of parts that shall be in contact with water and specify their component elements and the anti-corrosion process to be applied on them.

17.2 Pipe Specifications

Pipes should meet the physical characteristics presented in table1 below:

Table 1: Physical Characteristics of pipes

Internal Ø & external Ø (mm)	Thickness (mm)			Socket length (mm)	Nominal service pressure (bars)	Length of pipe (m)
	Minimum	Nominal	Maximum			
21x25	1.9	2.0	2.3	28	10	6
28x32	1.9	2.0	2.3	32	6	6
26.8x32	2.4	2.6	2.9	32	10	6
35x40	2.3	2.5	2.8	40	6	6
33.6x40	3.0	3.2	3.5	40	10	6
43.6x50	3.0	3.2	3.5	50	6	6
42x50	3.7	4.0	4.3	50	10	6
56.6x63	3.0	3.2	3.5	63	6	6
53x63	4.7	5.0	5.4	63	10	6
68.6x75	3.0	3.2	3.5	75	6	6
66.6x75	3.8	4.2	4.5	75	10	6
63.2x75	5.5	5.9	6.3	75	10	6
80.6x90	4.3	4.7	5.0	90	6	6

Tolerances

Ovalization: ± 1mm

Length of pipe: ± 1% =>±6cm

Socket length: ± 0.6mm

17.3. Control tests for Pipes

i) Length

The tolerance for pipe lengths shall be ± 1% (± 6cm). For every 100 pipes, if the number of pipes not respecting this tolerance is less than 3 i.e. 3%, then the whole lot shall be considered okay, otherwise the Contract Engineer shall request that as many pipes as possible be tested in the lot.

ii) External Diameter

The tolerance shall be ± 0.3mm for pipes of external diameters between 25mm and 50mm, and ± 0.4mm for pipes between 63mm and 75mm in external diameter. Before reception, the Contract Engineer shall verify the external diameters of 15 pipes for every 300 pipes. If 6 or more pipes fail to meet the tolerances prescribed above, he shall reserve the right to reject the whole lot. If 5 pipes fail to meet the tolerance stipulated above, 15 other pipes shall be selected at random from the same lot and verified. If the same results are obtained for 5 pipes, the whole lot shall be rejected.

iii) Thickness

Thickness verification should adhere to the specifications presented in table II below.

Table 2: Thickness Verification

No. of pipes in the lot	No. of pipes randomly selected for verification	No of bad pipes X	
		Lot accepted if X max =	Lot rejected if Xmin=
100-199	10	2	3
200-299	15	3	4
300-499	20	3	4
500-899	25	5	6
899-1300	30	6	7
1300-3200	40	8	9

The Contract Engineer shall carry out thickness verification in accordance with table II above

iv) Socket length

The socket length shall be verified according to agreed norms. The value obtained should have the theoretical value of the diameter of the tube plus 1.3mm. The tolerance shall be 0.6mm

v) Shrinkage cracks

Shrinkage cracks tests should be carried out according to agreed methods by the Contract Engineer on a 15-30cm long sample. No shrinkage cracks should occur if the pipe is at 90° to its horizontal axis. If this occurs for 15 samples representing a lot of 100 pipes, the lot shall be rejected.

vi) Internal Pressure

Pipe samples shall be subjected to 1.5 times the service pressure for duration of one hour. If one out of every five samples ruptures, another set of five shall be selected for retest. If the second set respects the specified relation with the service pressure, the set shall be considered satisfactory. Otherwise, either necessary adjustments shall be carried out to meet the required specifications, or the lot shall be rejected.

vii) Impact

This test shall be carried out on three samples, one from each extremity and the third, from the center, all three, one-meter long. Perpendicular masses shall be dropped from a height of one meter onto the samples as shown in table III.

Tableau 3: Impact Test Schedule

Pipe diameter	Mass (kg)
25	1
32	1
40	1
50	3.5
63	5
75	7.5
90	7.5

The pipes shall be accepted if, and only if, the percentage of broken pipes in the tested samples does not exceed 40%

viii) Labels

The Contractor shall ensure that all pipes for this project are labeled <H>.The Contract Engineer shall reject any pipe not labeled as such.

The Contractor shall furnish the Contract Engineer with information (name, address, phone, etc) on the factory being used to procure pipes for any project.

The Contractor shall present to the Contract Engineer a guarantee certificate from the factory of origin ascertaining that the pipes meet the required standards as described in the forgoing sections. The Contractor shall arrange for free access to the factory for the Contract Engineer to enable him request, as required, for all factory tests described in the aforementioned sections to be carried out by the manufacturer.

The performance guarantee of works shall cover all defects in pipes, their handling and workmanship.

Fittings Specifications

The fittings required for these works, are presented in Table IV below. Contractors are required to strictly respect these specifications.

All fittings shall be approved by the Contract Engineer before use. All fittings not conforming to those specified in Table IV shall be rejected. The performance guarantee of work shall cover all defects in fittings, their handling and workmanship.

Tableau 4: Specifications for Fittings

Description of Good One
ADAPTOR UNION 25-¾"
ADAPTOR UNION 32-1"
ADAPTOR UNION 40-1 ¼"
ADAPTOR UNION 50-1 -½"
ADAPTOR UNION 63-2"
ADAPTOR UNION 75-2½"
AIR VALVES
BALL VALVE 1 ½"
BALL VALVE 2"
DEC VALVE 0¾"

Description of Good One.
NIPPLE 2"
NIPPLE 2½"
PVC ELBOW 63
PVC RED SOCKET 40-32
PVC RED SOCKET 50-40
PVC RED SOCKET 63-50
PVC RED SOCKET 75-50
PVC RED SOCKET 75-63
PVC TEE 32
PVC TEE 40

DEC VALVE 1 ¼"
DEC VALVE 1½"
DEC VALVE 2"
DEC VALVE 2½"
ELBOW 0¾"
ELBOW 1 ¼"
ELBOW 1 ½"
ELBOW 2"
ELBOW 2 ½"
FLOAT VALVE 63
G.I PIPE 0¾"
G.I PIPE 1"
G.I PIPE 1¼"
G.I PIPE 1½"
G.I PIPE 2"
G.I PIPE 2½"
G.I SOCKET 0¾"
G.I SOCKET 1¼"
G.I SOCKET 1½"
G.I SOCKET 2"
G.I TEE 1"
G.I TEE 1¼"
G.I TEE 1½"
G.I TEE 2"
G.I TEE 2½
NIPPLE 0¾"
NIPPLE 1"
NIPPLE 1¼"
NIPPLE 1½"

PVC TEE 50
PVC TEE 63
PVC TEE 75
PVC VALVE 32
PVC VALVE 40
PVC VALVE 50
PVC VALVE 63
PVC VALVE 75
REDUCER G.I.1"-¾"
PVC RED SOCKET 75-63
SADLE PIECE 32-1"
SADLE PIECE 40-1
SADLE PIECE 50
SADLE PIECE 50-1"
SADLE PIECE 63
SADLE PIECE 63-1"
SADLE PIECE 75-1"
TAP 0¾"
UNION 0¾"
UNION 1"
UNION 1 ¼"
UNION 1 ½"
UNION 2 "
UNION 2½"
NON RETURN VALVE 2"
GEBAJOINT
GLUE 1 kg
HERM (ROLL)
SAND PAPER (ml)

Article 18: Piping

18.1 Description

This item shall consist of the supply and lying of all pipes, including the installation of accessories like couplings, tees, reducers, etc. to entirely complete this item as per these specifications and plans provided.

18.2 Care/Laying of Pipes

The soil in the bottom of the trench shall be lightly scarified before laying the pipes or other hydraulic elements.

During transport, storage, and assembling of piping element care shall be taken to avoid soil and other contamination from entering the system.

Lying of pipes, assembling of pipes and all other works directly related to piping works, shall only be executed during dry weather conditions.

Pipe elements and connecting accessories shall be assembled in such a way that no tension can occur in the separate elements.

Only skilled plumbers shall be employed on any plumbing work.

Pipe joints, reducers, tees, etc. shall be connected in conformity with the manufacturer's prescriptions

18.3 Method of determining quantity of G.I and PVC Piping laid.

The quantity of PVC and G.I piping laid shall be measured per linear meter of laid pipe. Measurements shall be made for each class of pipe and each diameter of pipe separately.

CHAPTER V: CONSTRUCTION METHODS

Article19: Setting out of Works.

The contractor shall be responsible for the setting out of all pertinent lines, works, grades, reference points and levels that may be required for the proper and accurate positioning of all the structures on the work site. The works so set out shall be received by the Contract Engineer before construction work actually begins

Article 20: Excavation of Trenches.

Pipe trenches shall be excavated to a depth of at least 80cm and width of 40cm.The bottom of each trench shall be free of any stones or other materials which could damage the pipes.

Article 21: Backfill

The Contractor shall be responsible for all backfill operations. However, such operations shall only be carried out after the dimensions and depth of the trenches have been approved by the Contract Engineer.

After the pipes have been laid in the trenches by qualified plumbers, and the successful hydraulic tests conducted, they shall be carefully covered with soil and rammed in, in soil layers of 20cm thick.

The backfilling of pipes crossing motor able roads shall be done in conformity with laid down norms. The compaction requirement for backfill shall be at least 90% of the dry modified optimum proctor density.

Article 22: Maintenance of Excavation

The Contractor shall bear the risk associated with the collapse of any surface exposed as a result of excavation effected anywhere on the work site, whether or not he takes any precautions against such accidents. The nature of the precautions he may take shall be entirely at his discretion. No water shall be allowed to accumulate in any part of an excavation. For that reason, every excavation shall be protected against flooding, seepage, run-off, etc. should water accidentally enter any excavation; it shall be immediately removed by pumping or bailing at the expense of the Contractor.

CHAPTER VI: WORK EVALUATION METHOD

Article 23: Control of the Works.

The supervision and control of the works shall be done by Controller under the coordination of the Contract Engineer.

Article 24: Worksite logbook.

Inorder to carry out an effective follow-up of the execution of the project, the Contractor shall make available in the worksite a logbook on which shall be recorded everything concerning work progression. This log book will help the Controler, on arrival in the worksite, to exactly know the state of evolution of the project.

The book will be held by the "Recorder", an employee of the Enterprise, and that will be his sole task in the worksite. The Recorder shall always put in writing all the daily activities in this book, as operations evolve.

In this book shall be recorded the following informations:

- Name of worksite (name of village),
- Serial number of Potable Water Supply Scheme in the Council,
- Dates and time of commencement of work at the valve chambers and standpipe,
- Length of piping (transportation) system and diameter of pipes,

- Length of distribution network and diameter of pipes,
- Number of stand taps and their altitudes,
- Nature of rock formations cut through "driller's cross-section",
- In short, all the technical details, incidents, breakdowns, difficulties specific to the evolution of the project, indicating the time these occurred.

The book shall be signed by the Representatives of the Administration and that of the Contractor, and shall serve as the basis for the establissement of vouchers.

Remarks and reserves made by the Contractor and/or the Administration shall be recorded in this book.

Article 25: Control and Supervision

The control of works shall be carried out by a Controller and Contract Engineers and shall be based on the following items:

- Definition of the work plan and its execution calendar in agreement with the Contractor.
- Choice of the configuration of the network and superstructures (construction of valve chamber, standpipe etc.) depending on the landscape (topography).

Article 26: Calculation of the overall level of Realization.

Each month, the overall level of realization shall be calculated using field data and the unit prices quoted by the Contractor in the Unit Price Schedule.

Article 27: Provisional Reception

The materiels to be used ought to undergo a qualitative provisional reception, which shall be based on the administrative and technical documents justifying the quality of the materials used are in conformity with the technical objectives.

This reception shall be later followed by a technical reception which shall take place in the worksite after the installation of the stand taps and after observing the whole disinfected system functioning, with water flowing from these taps.

The decision taken during this reception does not liberate the Contractor from his engagements with respect to the deadline as well as the technical specifications.

Any change of material that was proposed in the bid (type, characteristics, origin, etc.) before or after the conformity visit and during the execution of the project, is forbidden except authorized in writing by the Contracting Authority, following the application forwarded by the Contractor.

If the works are not in conformity with the specifications, the Contracting Authority can reject them and ask for their remplacement or necessary modifications, without any extra charge for this.

Article 28: Conditions for the Final reception

The final reception shall be pronounced after the expiration of the guarantee date which comes one year after the provisional reception. There shall be no specific test during the final reception, but a test of the equipments used in exploiting the spring and a survey among the population to confirm the good working order of the Scheme during the one year guarantee period.

CHAPTER VII: PROTECTION OF THE ENVIRONMENT

Article 29: The contractor shall be bound to comply with instruments governing environmental protection in the Republic of Cameroon and notably Framework Law No. 096/12 of 05 August 1996 on Environmental Management.

He shall particularly comply with the Special Technical Conditions relating to environmental protection.

Article 30: Cleaning of the Site

Cleaning of the site includes disposal of structures, equipment, materials and debris. It shall be performed within thirty (30) days as from the date of acceptance and before approval of the general and final statement of works.

BILL OF QUANTITIES AND COST ESTIMATES

BILL OF QUANTITIES AND COST ESTIMATES FOR THE EXTENSION OF 1,093 METER LENGTH OF PIPING NETWORK FROM NTAHKEKAH TO NKWASSI QUARTERS WITH THE CONSTRUCTION OF THREE STAND TAPS, BAMENDA III COUNCIL AREA, BAMENDA III SUBDIVISION, MEZAM DIVISION, NORTH WEST REGION

CODE	Description of Works	Unit	Qty	Unit Cost	Total amount
	LOT 100 :PRELIMINARY WORKS				
100	Site installation and mobilization	ls	1		
102	Production of execution program	ls	1		
	Total 100				
	LOT 200:CONSTRUCTION WORKS				
201	low point chambers with stone masonry (80x80x100) equipped with locking device and installation of washout valve at point "F"	u	1		
202	control valve chamber with stone masonry (80x80x100) equipped with locking device	u	3		
203	high point chamber with stone masonry (80x80x100) equipped with locking device and installation of air release valve at point "E"	u	1		
204	Stand tap " B,D,G" as on plan	u	3		
	Total 200				
	LOT 300: PIPPING NETWORK				
301	Excavation of pipe line	ml	1,093		
302	Supply and laying of PVC Ø63 NP10	ml	1,050		
303	Supply and laying of PVC Ø25 NP12.5	ml	18		
304	Pipe line indicators in RC placed every 50m	no	21		
305	Plumbing accessories	Ls	1		
	TOTAL 300				
	LOT 400: ENVIRONMENTAL MITIGATION MEASURES				
401	Backfilling of pipe line	ml	1,093		
402	Soak away pit of 1.2m deep by 80cm	No.	3		
403	Physico-chemical and bacteriological analysis of the water sample from a government authorized laboratory	ls	1		
404	Cleaning and disinfection of the pipeline	ls	1		
405	Labellisation and funders metallic information plate (Logo PNDP)	ls	1		
	TOTAL 400				
	LOT 500: PROJECT SUSTAINABILITY				
501	Formation and Training of water management committee under the supervision of MINEE and Council	ls	1		
502	Supply of complete tool box	ls	1		
	TOTAL 500				
	TOTAL WITHOUT TAXES				
	TVA 19.25%				
	IR 2.2% or 5.5%				
	TOTAL TTC				

SCHEDULE OF UNIT PRICES

UNIT PRICE SCHEDULE FOR THE EXTENSION OF 1,093 METER LENGTH OF PIPING NETWORK FROM NTAHKEKAH TO NKWASSI QUARTERS WITH THE CONSTRUCTION OF THREE STAND TAPS, BAMENDA III COUNCIL AREA, BAMENDA III SUBDIVISION, MEZAM DIVISION, NORTH WEST REGION

CODE	Description of Works	Unit	Qty	UNIT PRICE IN FIGURES	UNIT PRICE IN WORDS
	LOT 100 :PRELIMINARY WORKS				
100	Site installation and mobilization (information board, temporal huts, bringing in of equipment, personnel ,materials and reinstatement of the site)	ls	1		
102	Production of execution program (technical drawings, detailed notes)	ls	1		
	Total 100				
	LOT 200:CONSTRUCTION WORKS				
201	low point chambers with stone masonry (80x80x100) equipped with locking device and installation of washout valve at point "C" (excavation below depth f pipeline, lean concrete 5cm, stone masonry walls, pointing of internal walls, slab in RC equipped with locking device, installation of washout valve approved by the engineer)	u	1		
202	control valve chamber with stone masonry (80x80x100) equipped with looking device (excavation below depth f pipeline, lean concrete 5cm, stone masonry walls, pointing of internal walls, slab in RC equipped with locking device, installation of control valve PVC diameter 63mm approved by the engineer)	u	3		
203	high point chamber with stone masonry (80x80x100) equipped with locking device and installation of air release valve at point "I" (excavation below depth f pipeline, lean concrete 5cm, stone masonry walls, pointing of internal walls, slab in RC equipped with locking device, installation of air released valve PVC approved by the engineer)	u	1		
204	Stand tap " B,D,G" as on plan (excavation to a stable soil, pavement in mass concrete, basin in RC, pillar in RC, valve chamber behind in mass concrete and slab in RC equipped with locking device, installation of plumbing accessories).	u	3		
	Total 200				
	LOT 300: PIPPING NETWORK				
301	Excavation of pipe line (excavation to depth of 80cm x 40cm wide)	ml	1093		

302	Supply and laying of PVC Ø63 NP10	ml	1050		
303	Supply and laying of PVC Ø25 NP12.5	ml	18		
304	Pipe line indicators in RC placed every 50m	no	21		
305	Plumbing accessories	Ls	1		
	TOTAL 300				
	LOT 400: ENVIRONMENTAL MITIGATION MEASURES				
401	Backfilling of pipe line	ml	1093		
402	Soak away pit of 1.2m deep by 80cm (excavation, backfill with stones, RC slab)	No.	3		
403	Physico-chemical and bacteriological analysis of the water sample from a government authorized laboratory	ls	1		
404	Cleaning and disinfection of the pipeline	ls	1		
405	Labellisation and funders metallic information plate (Logo PNDP)	ls	1		
	TOTAL 400				
	LOT 500: PROJECT SUSTAINABILITY				
501	Formation and Training of water management committee under the supervision of MINEE and Council	ls	1		
502	Supply of complete tool box	ls	1		

DETAIL PRICE BREAKDOWN

Price No	Description	Daily out put	Total Quantity	Unit	Activities Duration
A - PERSONNEL	**Category**	**Number**	**Daily Salary**	**Paid Mandays**	**Amount**
			Total A		
B - EQUIPMENTS	**Type**	**Number**	**Daily Rate**	**Days billed**	**Amount**
			Total B		
C - MATERIALS	**Type**	**Unit**	**Unit price**	**Consumption**	**Amount**
D	**Total Direct Cost**		**A + B + C**		
E	General site expenses	10.00%	D x 10%		
F	General head office expenses	5.00%	D x 05%		
G	**Cost price**		**D + E +F**		
H	Risk + Profit	10.00%	G x 10%		
I	**Bid Price without tax**		**G + H**		
J	Unit Bid Price without tax		**F/Total quantity**		

PLANS AND DRAWINGS

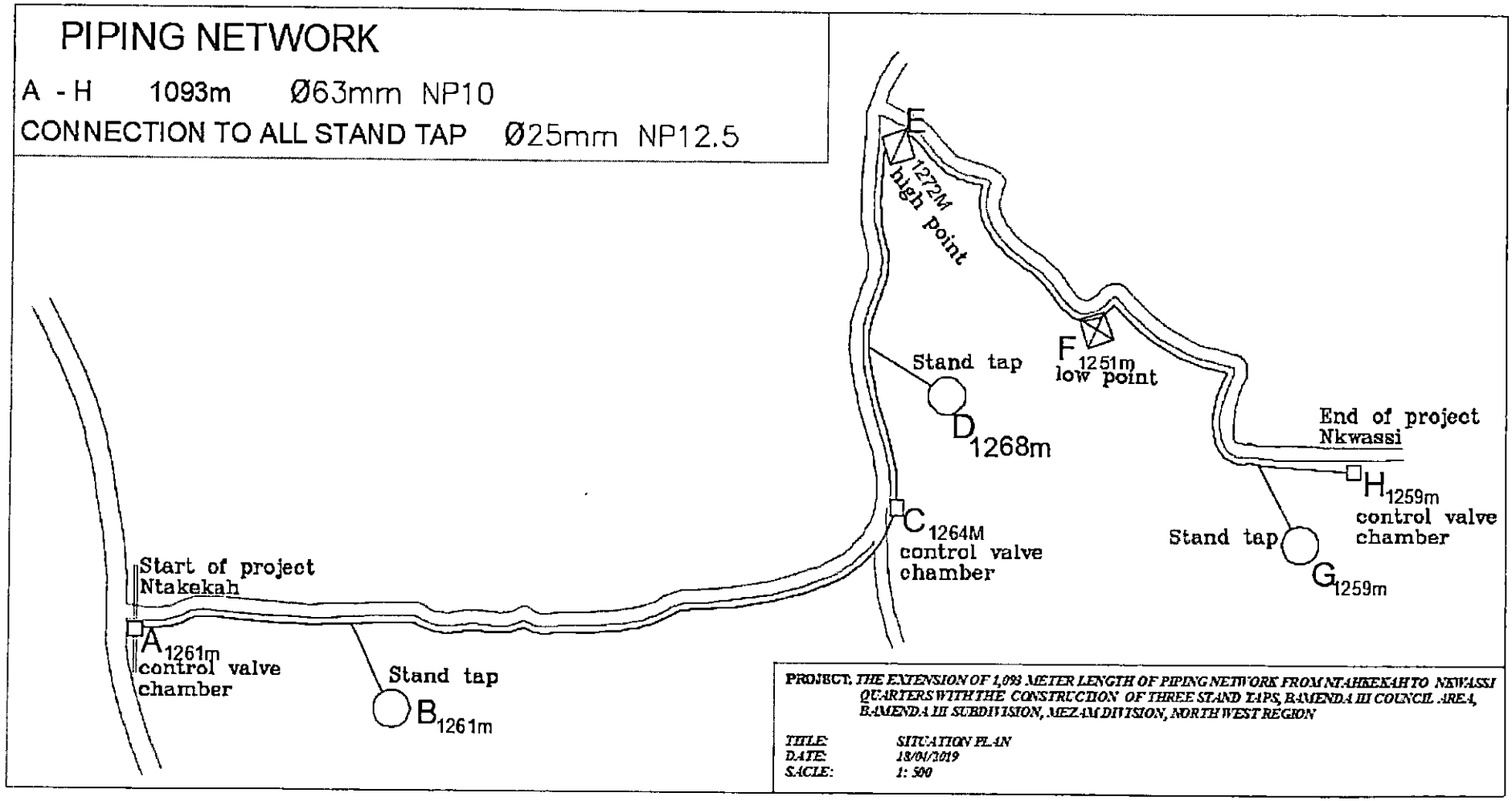
PIPING NETWORK
A - H 1093m Ø63mm NP10
CONNECTION TO ALL STAND TAP Ø25mm NP12.5
E
1272M
high point
F
1251m
low point
Stand tap
D
1268m
End of project
Nkwassi
H
1259m
control valve
chamber
C
1264M
control valve
chamber
Stand tap
G
1259m
Start of project
Ntakekah
A
1261m
control valve
chamber
Stand tap
B
1261m
PROJECT: THE EXTENSION OF 1,093 METER LENGTH OF PIPING NETWORK FROM NTAHKEKAH TO NKWASSI QUARTERS WITH THE CONSTRUCTION OF THREE STAND TAPS, BAMENDA III COUNCIL AREA, BAMENDA III SUBDIVISION, MEZAM DIVISION, NORTH WEST REGION
TITLE: SITUATION PLAN
DATE: 18/04/2019
SACLE: 1: 500

7.1.2. Situation plan of project

Figure 3: SCHEME OF NKWEN WATER SUPLLY MICROPROJECT

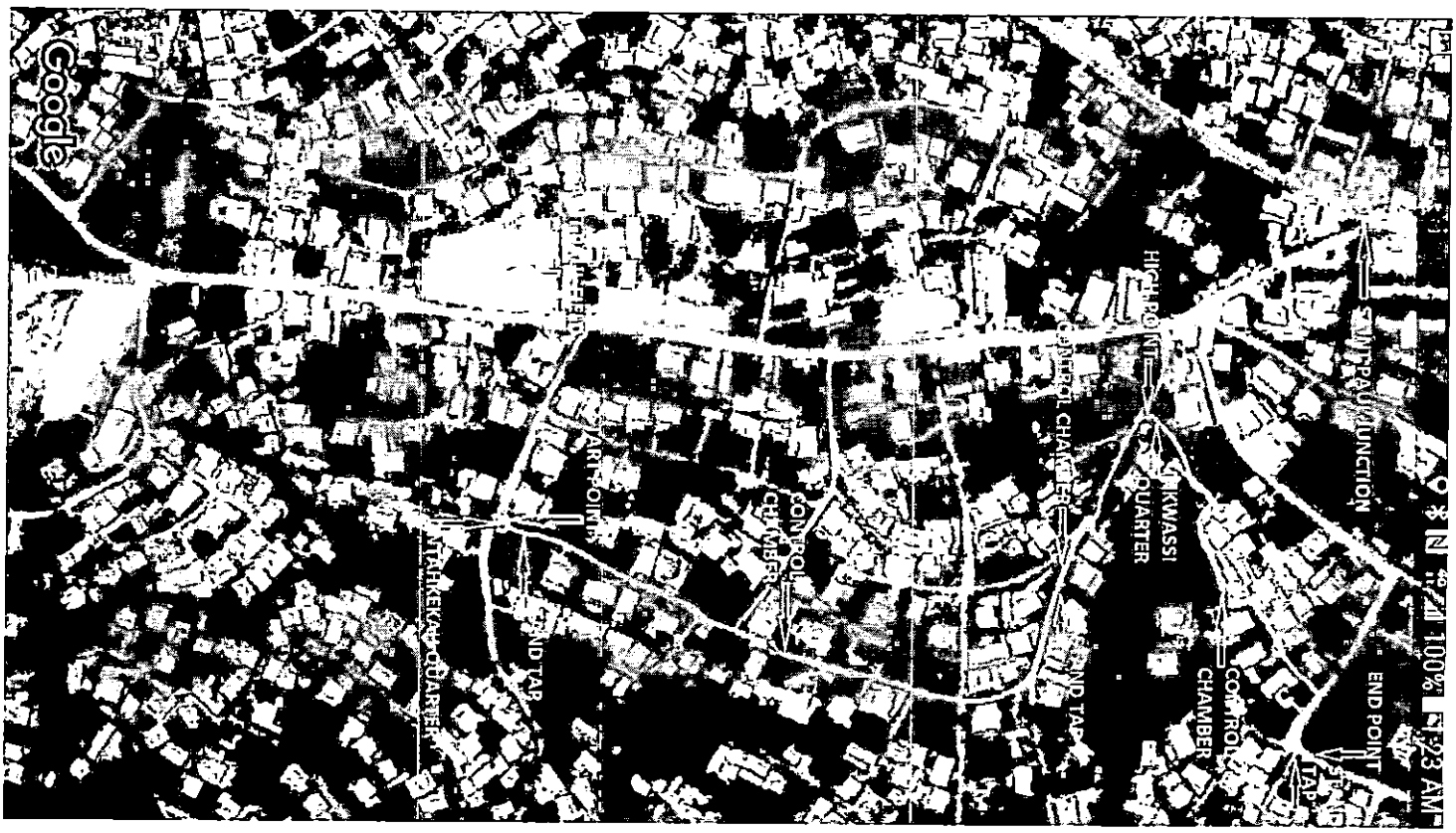

LIST OF MATERIALS
STAND PIPE
CEMENT 5 BAGS
WELDED MESH 26X46cm
RODS Ø6mm, 30mm

2no Ø6mm = 1.45m

2no Ø6mm =1.20m

2no Ø6mm =0.87m

4no Ø6mm =1.50m

3no Ø6mm =0.10m

AC 50 4.0m I PIECE

G.I. 2/4" 0.25m I PIECE, TAP 3/4" I 3/4" OR 1/2"

STONE $5m^3$

SAND $1m^3$

CEMENT BLOCKS 6no 15 x 20 x 40cm

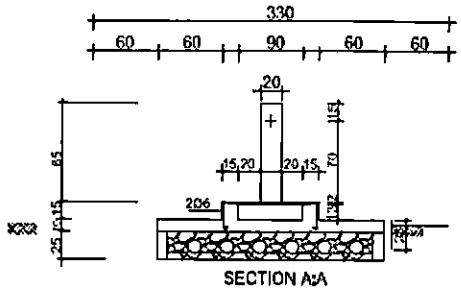

SECTION A;A

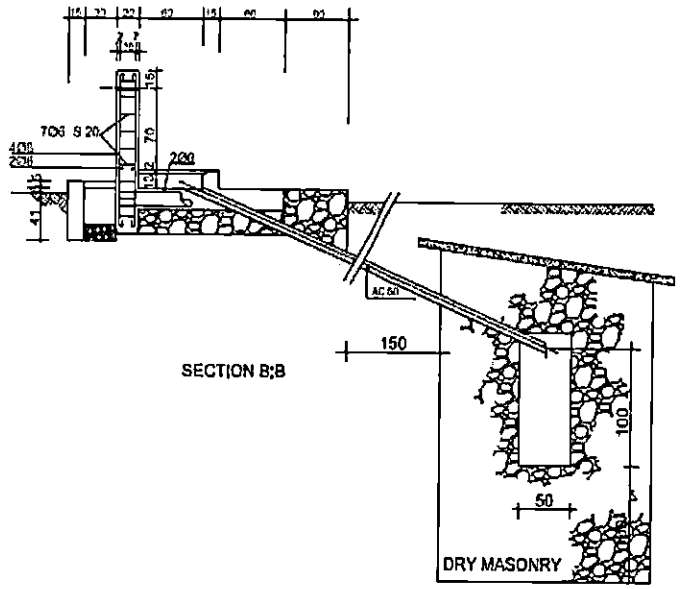

SECTION B;B

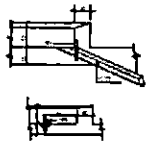

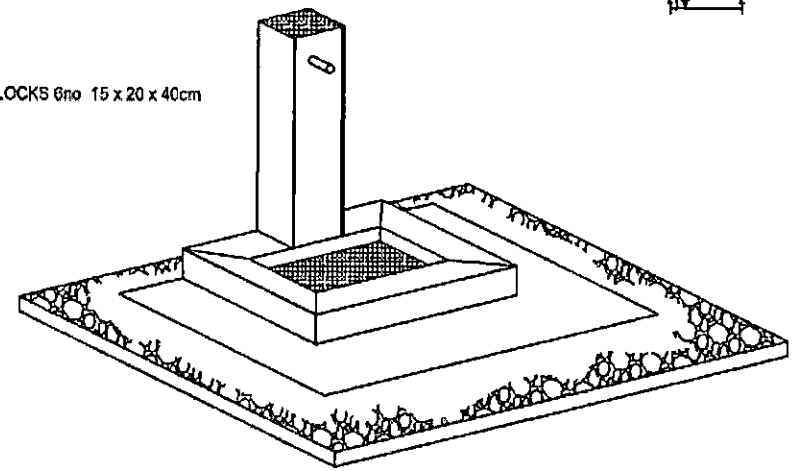
ISOMETRIC VIEW OF PUBLIC STAND PIPE

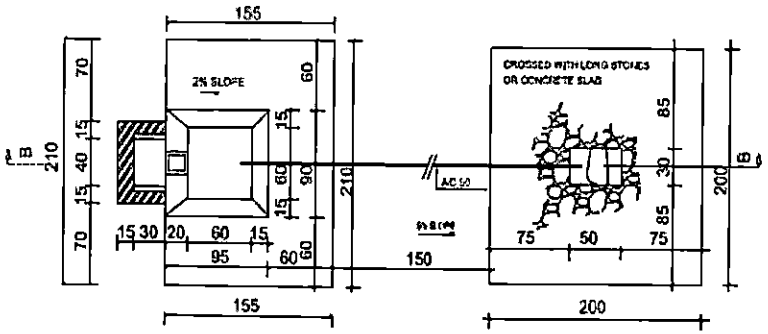

PLAN

STUDIED BY:- NGIBU Benard			
CONTENT	PUBLIC STAND PIPE	DATE:-	MARCH 2017

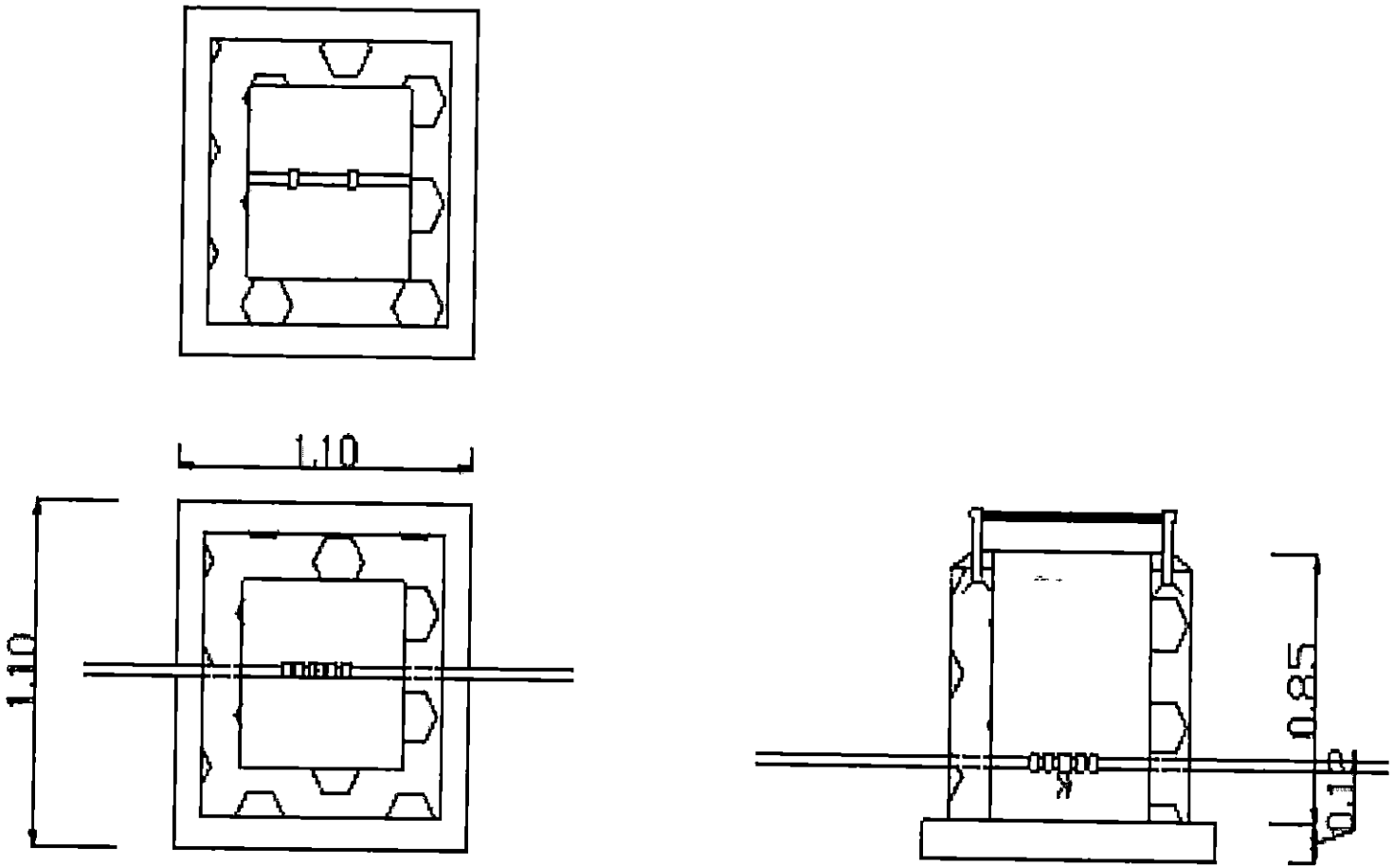

VALVE CHAMBER

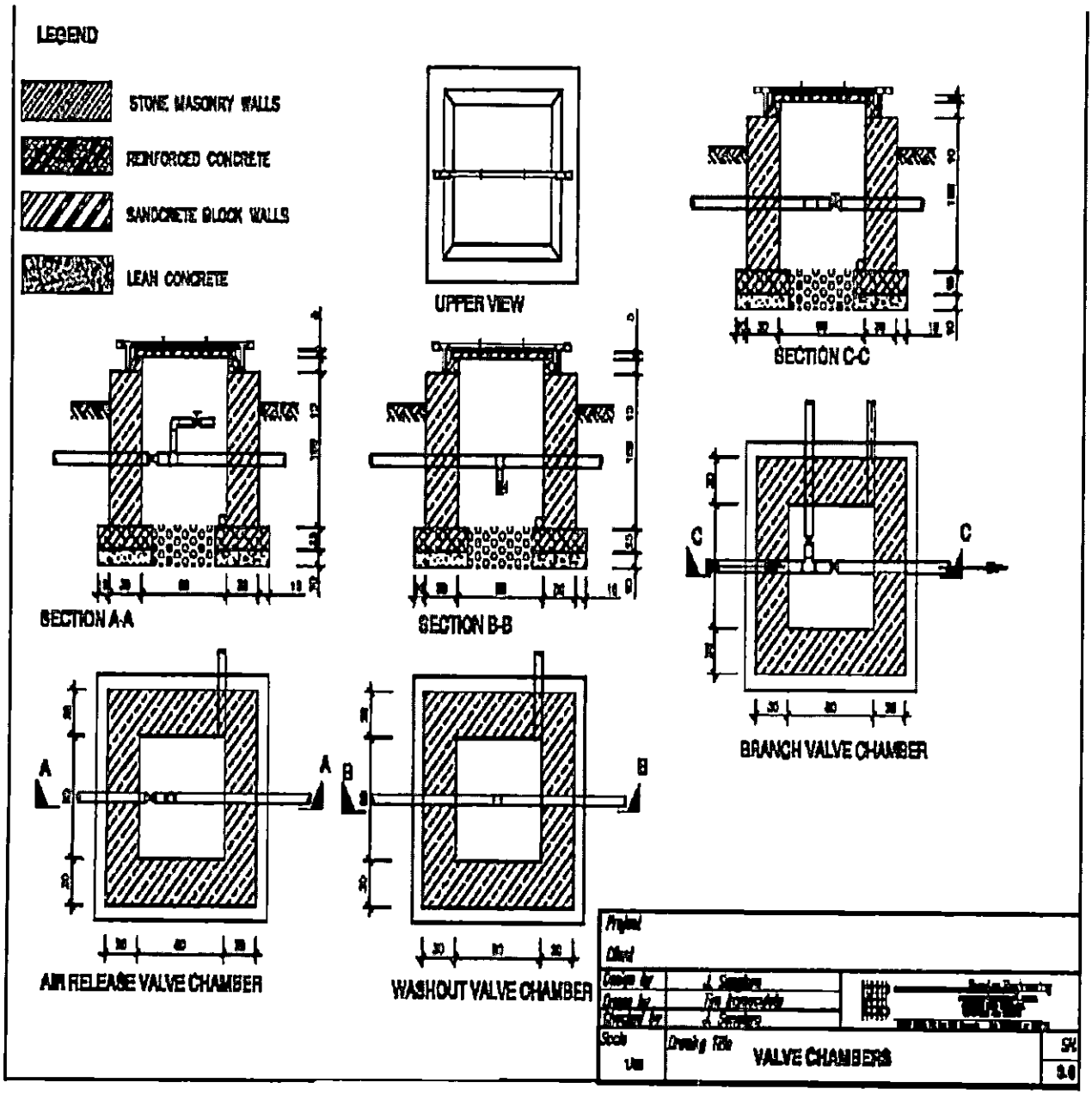
LEGEND
STONE MASONRY WALLS
REINFORCED CONCRETE
SANDCRETE BLOCK WALLS
LEAN CONCRETE
UPPER VIEW
SECTION C-C
SECTION A-A
SECTION B-B
BRANCH VALVE CHAMBER
AIR RELEASE VALVE CHAMBER
WASHOUT VALVE CHAMBER
VALVE CHAMBERS

MODEL OF ENGAGEMENT OF THE TENDERER

ENGAGEMENT OF THE TENDERER

I the undersigned, _____, acting by virtue of powers conferred on me, on behalf of the company, _____ with Headquarters situated at _____ Town,

After having taken knowledge of all the parts of the Open National Tender Documents *N°* _____

_____ for _____

_____.

Subject to me and commits me to carry out the aforementioned Contract in accordance with the conditions of the Particular Payment of the Invitation to tender, the Book of the Particular Technical specifications and the Book of the Particular Administrative Clauses, in particular the quantitative and qualitative confirmation of work, the respect of the deadlines, the guarantees and the insurance.

I commit myself moreover to ensure the recording and paying the forwarding costs of the contractual parts.

I declare taking to have taken perfect knowledge of the decree n° 33/CAB/PM of February 13 2007 putting the general Administrative clauses applicable to the Contracts of public works and supplies.

I confirm my agreement on the terms of the Special Administrative Clauses (Draft contract) and join the initialled copy of the aforesaid document to my offer.

I declare moreover that I remain committed by the present tender during a ninety (90) days deadline as from the date of opening of the folds.

Done at _____, the _____

Read and approved

The CONTRACTOR

MITIGATION OF RISKS CLAUSES ON THE ENVIRONMENT

DEFINITION

These standard clauses constitute the Environmental Regulations relating to the construction works contracts and which will have to be inserted in the tender documents of the enterprise within the framework of the PNDP2.

Thus, every enterprise pre-selected for a works contract will have to implement not only measures aimed at mitigating the socio-environmental impacts of the micro-projects but also environmental and social clauses outlined Bamenda. It should be stressed that these clauses apply to all types of micro-projects, the enterprise as well as all sub-contractors or dealers.

These measurements include:

- A reduction in the raising of dust particles at the work site in order to protect the health of the beneficiary population and site workers, by regular watering of the site, or the adoption of an appropriate calendar;
- A Reduction in sound (noise) effects due to the movements of the equipment and machines within the construction site;
- Non obstruction of the existing rivers by works, or the deposit of waste in the river channel;
- Putting in place a management plan for oils, fuel, lubricants and other dangerous products. This plan will have to include the recuperation of the above mentioned products and their transfer to specialized companies for treatment;
- Automatic stop of works in the event of discovering of an archaeological or historical artefact, then report immediately to the services of the Ministry of Culture;
- Prohibition to transport or drive out game, hunting and non timber forest products by the personnel of the Project site;
- Put at the disposal of the working site adequate equipment for potable water and domestic use water;
- Priority recruitment for local labour, as well as the use of local materials;
- Putting of warning Signs (sign boards) at project site during and after work; putting speed limits warning signs as well in order to protect the safety and health of the resident population and of site workers;
- The wearing of appropriate equipment & attire (e.g. work clothes) by site workers.
- Restoring (*putting back to its original nature*) gradually installations at project site at the end of works;
- Organizing information and sensitizing campaigns for site workers and the beneficiary populations, on medical risks, risks of accidents, and on the impacts of poaching.

According to the various phases of work, under the control of contracting authority-Mayor (Council development officer) assisted by the local representatives of the MINEP and the PNDP, the provisions here-in will have to be considered or implemented by the contractor.

Article II. Starting of works and sensitization of stakeholders

Before the effective start of works, the company or enterprise must prepare an environmental action plan specifying the whole of environmental measures to be implemented, as well as rules of procedures mentioning in a specific way the safety requirements and in particular the wearing of appropriate equipment (work clothes) and speed limit warning signs. Furthermore, these internal rules and regulations will have to prescribe the prohibition of c alcohol consumption during working hours, to transport or hunt game, to abusively use wood for fuel, as well as the sensitization of the personnel on the dangers of the STI/SIDA, the respect of the customs and habits of the populations of the area. These rules must be pasted within the company.

On the other hand, an information and sensitization campaign of the personnel and residents will have thus to be organized beforehand and their attention will have to be drawn to all these aspects, including the calendar of execution, the employment opportunities. In particular, these stakeholders should be

informed on the reasons for the choice of the site for the localization of the micro-project as well as the environmental action plan. This sensitization campaign will have to be re-lunched during the execution of the work.

Article III. Setting up a project site

a) **Localization**

The importance of setting up a site is determined by the volume and the nature of work to be realized, the number of workmen or labourers, the number and the type of machines. The plan of setting up a project site will have to take into account management and protection measures.

In this regard, the selected site must be at a distance from at least:
- 50 m off the road
- 100m off a lake or river
- 100m off habitation (dwelling);

The site will have to be selected in order to limit clearing, the pulling up of shrubs or bushes and the demolition of the trees. The valuable trees will be preserved and protected.

The site must be selected away from sensitive zones particularly the marshy zones, the wetlands, sacred zones and the hillsides. Lastly, the site should envisage an adequate Water drainage on the whole of its surface

b) **Equipment**

The office and housing area in the working site for the personnel must be equipped with sanitary facilities (latrines, septic tanks, absorbing wells, wash-hand basins and showers) according to the number of the work force. The water tanks (reservoir) will have to be installed and the quantity of water must be adequate with the needs. Adequate drainage must protect the installations.

c) **Management of solid waste and liquids**

Receptacles (*containers*) to receive waste are to be installed near the various installations. These receptacles are to be emptied periodically and the waste deposited in a garbage can for recuperation by the Council or in a dumping pit. This pit must be located at least 100m from the installations and in case of a river at least 150m away. At the end of work the pit is to be filled (restored) with soil up to the level of the original soil.

The pads (apartments) for servicing and washing of the machines will have to be concreted and equipped with a sump - *container into which a liquid that is not needed can flow*) for recuperation of oils and greases. Worn oils or drainage oil are to be stored in barrels and kept in a secured place while waiting to be moved to a specialized centres for treatment. It is the same process for oil filters, batteries and other toxic waste.

Article IV. Recruitment of the site workers, health and safety

The contractor is expected to make use of in the most possible way local labour in the area or zone where work is to be realized or executed. Failing to find the qualified personnel on the spot, he is authorized to recruit labour in the wider working area.

Apart from the training and information for the personnel on the aspects mentioned above (point 1), the contractor must provide his workmen with the necessary safety and adequate equipment, according to the duty post – anti-dust to prevent dust particles, anti-noise helmet, safety shoes, boots, glove, glasses etc.

During the works, mobile and fixed signs or notice will be put in place in order to ensure the safety of the staff and resident population. The company or enterprise will carry out routine watering of the site

in order to limit dust particles. He will also take care of the speed limits of the various vehicles and machines (less than 40 Km/h). In the same way, he will have to take care that all the temporary deviations are identified in collaboration with the resident population, and the deviations do not affect the sensitive zones.

Article V. Opening up and exploitation of quarries and borrowed zones

a) Opening up and exploitation:
The opening up and the use of quarries are regulated by:

- Law 64/LF/3 of April 6, 1964;
- Decree 64/Lf-163 of May 26, 1964,
- Ordinance 74/2 of July 6, 1974,
- Law 76/14 of July 8, 1976 modified and supplemented by that of N0 90/021 of August 10, 1990,
- Decree 88/772 of May 16, 1988 modified by decree 89/674 of April 13, 1989,
- Decree 90/1477 of November 9, 1990.

The quarries exploited on the public lands are subjected to authorization. The quarries exploited on private lands are subjected to declaration.
The contractor will have to ask the authorizations envisaged by the texts and for payments in force and will take responsibility for all his related expenses, including the expenses for an eventual compensation of the owner or proprietor.

The contractor will have to present a programme (Plan) for exploitation of the quarry according to the volume to be extracted for works and the reserves.

If the exploitation of the quarry requires noise (*sound, blast*), the residents should consult the exploitation schedules, and the generated noise will not have to exceed 90 decibels at the level of the residents.

The spot for quarry deposits will have to be selected so as not to obstruct the run-off water and will have to be protected from erosion. The contractor will have to obtain controller's approval for the quarry deposits spot.

b) Bringing back the site to initial or original state (Restoration of the site) & withdrawal from the site

At the end of works, the site will have to be brought back to its initial or original state. In this regard, installations necessary hereafter will have to be carried out:

- The adjusting of opening materials, then the levelling of the site and in particular levelling of the top soils in order to facilitate the infiltration of water, re-planting of grass and trees as the case may be,
  - Restoration of the former natural flows,
  - Removal of the dilapidated aspect of the site,
- Fitting up (either through re-filling) of pits in order to avoid the erosion of the degraded soil,
- Restoration of the pit and recuperation of surface waters and conservation of the slope, if the quarry or the borrowed zone can be used for other uses - livestock, playgrounds for the inhabitants, etc.

As regards the working site, the contractor will complete all necessary work to restore the site (bringing the site to its original state). The contractor will have to take away all his material & machines. He is not supposed to abandon any equipment nor materials on the site, or at the surroundings, without prior notice of the controller. This restoration of the site relates to all its deviations and contours (e.g. foot paths etc) set up during the works.

It is desirable that the sites should be restored in a progressive way.

Article VI. Clearing of undergrowth and pruning

Clearing of undergrowth and pruning of the immediate surroundings of the work in order to improve on the sunning conditions of the earth roads and also to improve on the visibility.

As regards pruning, all the branches overhanging the platform will be cut vertically passing by the clearing limit. All the trees will be cut down overhanging the immediate surroundings and threatening to fall on the work or to impede circulation after a tornado.
The question on clearing of the undergrowth consists of cutting at ground level without uprooting the vegetation.
All trees and shrubs at the entrance and exit of the works (bridges, etc.) will be uprooted so as to facilitate the running of water and to facilitate the regular inspections of the works.

Lastly, it is requested from the contractor to identify as from the starting of works, the buyers (middlemen) of the aforementioned waste among the residents (fodder for the cattle, for construction, fuel wood, etc). It is prohibited in the areas of the Extreme North and North to burn on the spot wastes vegetation that have been cut.

For other regions, if the burning of waste is authorized by the Controller, the contractor must take additional precautions by increasing for example the width of the safety belts around waste to burn, and prevent the residues from being an obstacle to the running off of water.

Article VII. Management of water Resources

The contractor will have to avoid any conflict, which can result from the use of water resources, in particular in the Northern regions of Cameroon.

Thus, for these water needs or requirements (watering of area around the works), the taking away, will have to be done after obtaining the necessary authorization from the competent services (Regional Delegation of Water and Energy) and in consultation with the beneficiary populations.

In any case, the company or enterprise will have to avoid taking away important items in seasonal rivers, likely to stop the water satisfaction needs of the residents or beneficiary population. In addition, he will have to avoid intervening in sensitive zones; avoid introducing various pollutants resulting from washing or draining of vehicles oil and machines. Lastly, he will not have to undertake the installation of equipment that can stop the flowing of rivers, without prior notice of the competent Services.

Article III. Compensation for the damages caused to third parties

It can happen that the company hurts an individual in a deliberate or accidental manner (destruction of crops, habitat, etc). If this wrong is not taken into account by the project owner or contracting authority, it will have to be compensated with the expenses from the company and satisfactorily to the party. On the other hand, he will have to issue a certificate of compensation to him, in order to avoid any other later complaints.